Document feeder assembly (5 of 5)

Figure 4-45 Document feeder assembly (5 of 5)

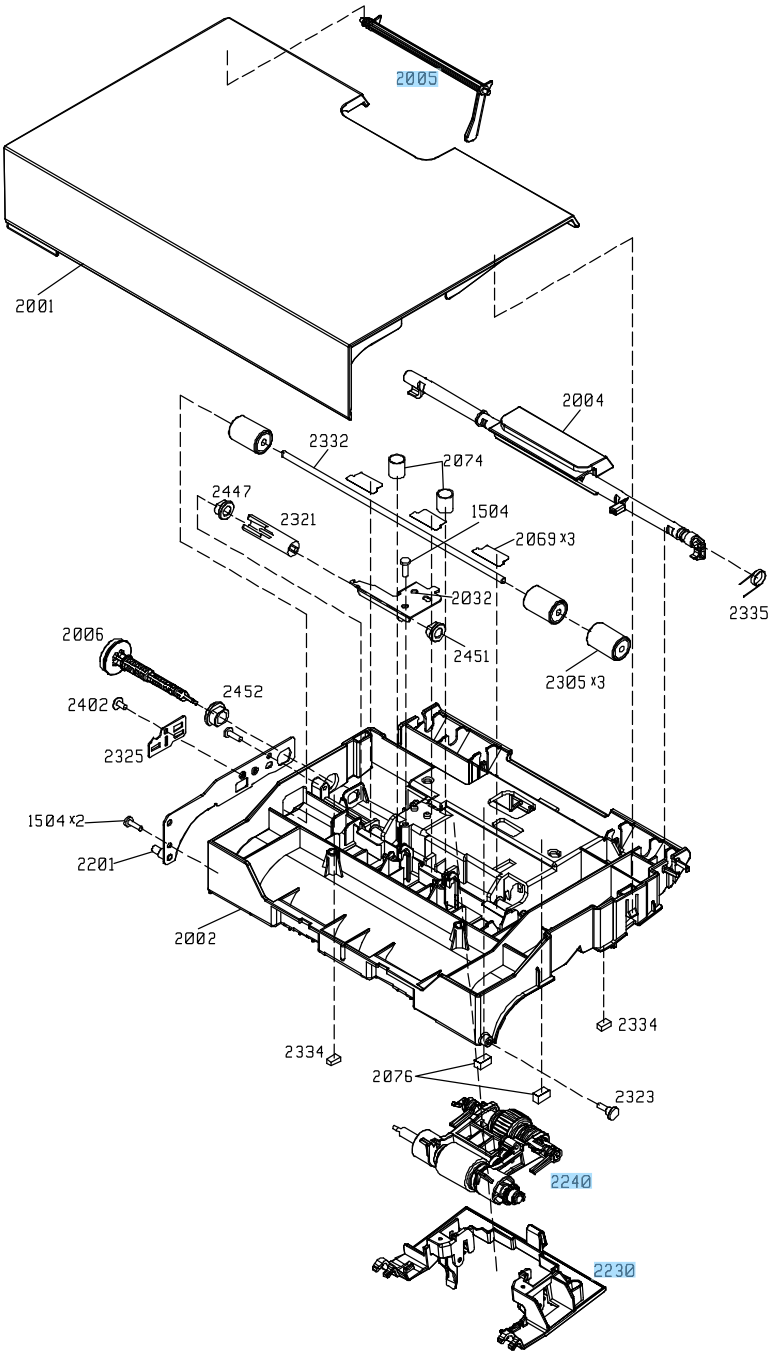

Table 4-46 Document feeder assembly (5 of 5)

Ref	Description	Part number	Qty
2005	ASY-LVR-FE-EMP-SP	PF2309K130NI	1
2240	ASY-ROL-FE-FEED-SP	PF2309K131NI	1
2230	ASY-CVR-FE-PICK-SP	PF2309K132NI	1

NOTE: Kit CE248-67901 includes a separation pad, roller assembly, and instructions.