XEROX

# Service Manual

701P28180

# Phaser® 7700

## Color Laser Printer

XEROX®

**Service Manual**

701P28180

# Phaser®7700

## Color Laser Printer

**Warning**

The following servicing instructions are for use by qualified service personnel only. To avoid personal injury, do not perform any servicing other than that contained in operating instructions unless you are qualified to do so.

This printing: December 2006

Prepared By:

Xerox Corporation

XOG Worldwide Product Training and Information

26600 SW Parkway

Wilsonville, OR 97070

© 2006 by Xerox Corporation. All rights reserved.

Unpublished rights reserved under the copyright laws of the United States. Contents of this publication may not be reproduced in any form without permission of Xerox Corporation.

Copyright protection claimed includes all forms and matters of copyrightable materials and information now allowed by statutory or judicial law or hereinafter granted, including without limitation, material generated from the software programs which are displayed on the screen such as styles, templates, icons, screen displays, looks, etc.

Xerox technical training materials and service manuals are intended for use by authorized Xerox service technicians and service partners only and are not for resale. These materials may not be distributed, copied, or otherwise reproduced without prior written consent from Xerox Corporation.

XEROX®, CentreWare®, Phaser®, PrintingScout™, TekColor™, and Walk-Up® are trademarks of Xerox Corporation in the United States and/or other countries.

Adobe Reader®, Adobe Type Manager®, ATM™, and PostScript® are trademarks of Adobe Systems Incorporated in the United States and/or other countries.

Apple®, AppleTalk®, EtherTalk®, LaserWriter®, LocalTalk®, Macintosh®, Mac OS®, and TrueType® are trademarks of Apple Computer, Inc. in the United States and/or other countries.

HP-GL®, HP-UX®, and PCL® are trademarks of Hewlett-Packard Corporation in the United States and/or other countries.

Windows® and Windows Server™ are trademarks of Microsoft Corporation in the United States and/or other countries.

Novell®, NetWare®, NDPS®, NDS®, Novell Directory Services®, IPX™, and Novell Distributed Print Services™ are trademarks of Novell, Incorporated in the United States and/or other countries.

Sun$^{SM}$, Sun Microsystems™, and Solaris™ are trademarks of Sun Microsystems, Incorporated in the United States and/or other countries.

SWOP® is a trademark of SWOP, Inc.

UNIX® is a registered trademark in the US and other countries, licensed exclusively through X/Open Company Limited.

PANTONE® Colors generated may not match PANTONE-identified standards. Consult current PANTONE Publications for accurate color. PANTONE® and other Pantone, Inc. trademarks are the property of Pantone, Inc. © Pantone, Inc., 2000.

# User Safety Summary

## Terms in Manual

Various terms are used throughout this manual to either provide additional information on a specific topic or to warn of possible danger that might be present during a procedure or action. Be aware of all symbols and terms when they are used, and always read **NOTE**, **CAUTION** and **WARNING** messages.

**NOTE:** A **NOTE** may indicate an operating or maintenance procedure, practice or condition that is necessary to efficiently accomplish a task.
A **NOTE** may also provide additional information related to a specific subject or add a comment on the results achieved through a previous action.

**CAUTION:** A **CAUTION** indicates an operating or maintenance procedure, practice or condition that, if not strictly observed, could result in damage to, or destruction of, equipment.

**WARNING:** A **WARNING** indicates an operating, or maintenance procedure, practice or condition that, if not strictly observed, could result in injury or loss of life.

## Terms on Product

**CAUTION:** A personal injury hazard exists that may not be apparent. For example, a panel may cover the hazardous area.

**DANGER:** A personal injury hazard exists in the area where you see the sign.

## Power Source

For 110 VAC printers, DO NOT apply more than 127 volts RMS between the supply conductors or between either supply conductor and ground. Use only the specified power cord and connector. For 220 VAC printers, do not apply more than 240 volts RMS between the supply conductors or between either supply conductor and ground. Use only the specified power cord and connector. Refer to a qualified service technician for changes to the cord or connector.

**WARNING:** If the product loses the ground connection, usage of controls and other conductive parts can cause an electrical shock.

## Power Supply and Electrical Components

Before starting any service procedure, switch off the printer power and unplug the power cord from the wall outlet. If you must service the printer with power applied, be aware of the potential for electrical shock.
***Do not touch any electrical component unless you are instructed to do so by a service procedure.***

## Mechanical Components

Manually rotate drive assemblies to inspect and gears.
***Do not try to manually rotate or manually stop the drive assemblies while any printer motor is running***

## Laser Components

**WARNING:** This printer generates a laser beam as part of the printing process. The laser beam in this printer is invisible. Direct eye exposure to the laser beam may cause eye injury or blindness.

To avoid permanent eye damage, follow these directions:

- Before starting any service procedure, switch off the printer power and unplug the power cord from the AC wall outlet.
- Do not disassemble the Laser Scanner Assembly.
- Use caution when you are working around the Laser Scanner Assembly or when you are performing laser related troubleshooting or repair procedures.
- Never place a mirror or a reflective tool or object in the laser beam path.
- Do not disassemble the printer in such a way that the laser beam can exit the print engine during a print cycle.

## Fuser Components

**WARNING:** This printer uses heat to fuse the toner image to a sheet of paper. The Fuser Assembly is very hot. Turn Off the printer power and wait at least 30 minutes for the Fuser to cool before you attempt to service the Fuser Assembly or adjacent components.

## Safety Components

Make sure covers and panel are in place and that all interlock switches are all functioning correctly after you have completed a printer service call. If you bypass, or cheat, an interlock switch during a service call, use extreme caution when working on or around the printer.

## Warning Labels

Throughout the printer, warning labels are displayed on potentially dangerous components. When you service the printer, check to make certain that all warning labels are in place.

**Most importantly, read and obey all posted warning labels.**

**WARNING:** Turning the power Off using the On/Off switch does not de-energize the printer. You must remove the power cord to disconnect the printer from the main power source. Keep the power cord accessible for removal in case of an emergency.

## Safety Instructions

Read all installation instructions carefully before you plug the product into a power source.

## Care of Product

Disconnect the power plug by pulling the plug, not the cord.

- Disconnect the power plug if the power cord or plug is frayed or otherwise damaged,
- Or if any liquid or foreign material is spilled into the case,
- Or if the printer is exposed to any excess moisture,
- Or if the printer is dropped or damaged,
- Or if you suspect that the product needs servicing or repair,
- And whenever you clean the product.

## Ground the Product

Plug the three-wire power cord (with grounding prong) into grounded AC outlets only. If necessary, contact a licensed electrician to install a properly grounded outlet.

# Service Safety Summary

## General Guidelines

**For qualified service personnel only:** Refer also to the preceding Users Safety Summary.

**Do not service alone:** Do not perform internal service or adjustment of this product unless another person capable of rendering first aid or resuscitation is present.

**Use care when servicing with power on:** Dangerous voltages may exist at several points in this product. To avoid personal injury, do not touch exposed connections and components while power is On.

Disconnect power before removing the power supply shield, soldering, or replacing components.

**Do not wear jewelry:** Remove jewelry prior to servicing. Rings, necklaces, and other metallic objects could come into contact with dangerous voltages and currents.

**Power Source:** This product is intended to operate from a power source that does not apply more than 127 or 240 volts AC RMS (depending on printer model) between the supply conductors or between either supply conductor and ground. A protective ground connection by way of the grounding conductor in the power cord is essential for safe operation.

## Class 1 Laser Product

The Phaser® 7700 Color Printer is certified to comply with Laser Product Performance Standards set by the U.S. Department of Health and Human Services as a Class 1 Laser Product. This means that this is a class of laser product that does not emit hazardous laser radiation; this is possible only because the laser beam is totally enclosed during all modes of customer operation.

The laser and output of the laser scanner unit produces a beam that, if looked into, could cause eye damage. Service procedures must be followed exactly as written without change.

When servicing the machine or laser module, follow the procedures specified in the manual to avoid any hazards from the laser.

Laser (FDA): Any laser label visible to service must be reproduced in the service manual with location shown or indicated. Safe working procedures and clear warnings concerning precautions to avoid possible exposure must also be included.

## Federal Communication Commision Compliance

This equipment has been tested and found to comply with the limits set for a Class B digital device, as stated in Part 15 of the FCC rules. These limits are designed to provide reasonable protection against harmful interference in a commercial installation. This equipment generates, uses, and may radiate radio frequency energy. If not installed and used in accordance with the instructions provided, this equipment may cause disruptive interference to nearby radio and television communications. Even if the equipment is installed according to the instructions, there is no guarantee of no interference in a particular installation. If this equipment does cause disruptive interference to nearby radio and television reception, switch the equipment off to determine if it is the true cause of the interference. If the equipment is the cause of the interference, the user should try to minimize the interference by taking one or more of the following courses of action:

**Note** Installation of the Finisher and/or the Token Ring Interface results in an FCC classification change to Class A.

- Either re–orient or relocate the radio/television receiving antenna.
- Increase the separation between the equipment and the radio/television receiver.
- Connect the equipment to an AC outlet that is not on the same circuit as the radio/television receiver.
- If the previous solutions fail to bring results, you should consult either your equipment dealer or an experienced radio/television technician.

For more information on interference, refer to the Federal Communications Commission's booklet "How to Identify and Resolve Radio-TV Interference Problems."

This booklet is available from the U.S. Government Printing Office, Washington D.C. 20402, Stock No. 004-000-00345-4.

## Canadian Notice

This digital apparatus does not exceed the Class B limits for radio noise emissions from digital apparatus as described in the radio interference regulations of the Canadian Department of Communications.

**Note** Installation of the Finisher and/or the Token Ring Interface results in a classification change to Class A.

## Avis Canadien

Cet appareil numerique est conforme aux limites émission de bruits radioélectriques pour les appareils de classe B stipulés das le réglement sur le brouillage radioéletrique du Ministére des Communcations du Canada.

## European Notice

This equipment was tested and is determined to be compliant with VDE requirements for a Class B device.

## Hinweis

Hiermit wird bescheinigt, dass der Babe Laserdrucker, in bereinstimmung mit den Betimmunngen der Vfg 104ß 984 funkenstört ist. Der Deutschen Bundespost wurde das Inverkehrbringen dieses Gertëes angqeigt und die Berechtigung zur berprufung der Serie auf Einhaltung der Bestimmungen eingeräumt.

# ESD Precautions

Some semiconductor devices are easily damaged from static electricity. These components are Electrostatically Sensitive Devices (ESDs); examples include integrated circuits (ICs), Large-Scale Integrated circuits (LSIs), some field-effect transistors and semiconductor chip components. The following techniques reduce the occurrence of component damage caused by static electricity:

**CAUTION:** Be sure the power is Off to the chassis or circuit board, and observe all other safety precautions.

- Immediately before handling any semiconductor components assemblies, drain the electrostatic charge from your body by touching a known earth ground. Alternatively, wear a discharging wrist strap device. (Be sure to remove the strap before applying power to the unit under test to avoid potential shock.)
- After removing an ESD-equipped assembly, place it on a conductive surface such as aluminum foil or the static bag to prevent accumulation of an electrostatic charge.
- Do not use freon-propelled chemicals. These can generate electrical charges sufficient to damage ESDs.
- Do not remove a replacement ESD from its protective package until you are ready to install it. Most replacement ESDs are packaged with leads that are electrically shorted together by conductive foam, aluminum foil or other conductive materials.
- Immediately before removing the protective material from the leads of a replacement ESD, touch the protective material to the chassis or circuit assembly into which the device is to be installed.
- Minimize body motions when handling unpackaged replacement ESDs. Motion such as your clothes brushing together, or lifting a foot from a carpeted floor can generate enough static electricity to damage an ESD.
- Handle ICs and EPROMs carefully to avoid bending a pin.
- Pay attention to the direction of parts when mounting or inserting them on a PCB.

# Contents


User Safety Summary ..... 1-iii
- Terms in Manual ..... 1-iii
- Terms on Product ..... 1-iii
- Power Source ..... 1-iv
- Power Supply and Electrical Components ..... 1-iv
- Mechanical Components ..... 1-iv
- Laser Components ..... 1-v
- Fuser Components ..... 1-v
- Safety Components ..... 1-v
- Warning Labels ..... 1-v
- Safety Instructions ..... 1-vi
- Care of Product ..... 1-vi
- Ground the Product ..... 1-vi

Service Safety Summary ..... 1-vii
- General Guidelines ..... 1-vii
- Class 1 Laser Product ..... 1-vii
- Federal Communication Commision Compliance ..... 1-viii
- Canadian Notice ..... 1-ix
- Avis Canadien ..... 1-ix
- European Notice ..... 1-ix
- Hinweis ..... 1-ix

ESD Precautions ..... 1-x

**Contents** **2-xi**

**List of Tables** **2-xxi**

**List of Figures** **1-xxiii**

# General Information 1-1


Phaser 7700 Printer Overview ..... 1-2
- Printer RAM and Printer Capabilities ..... 1-4
- CRC Life Counter Behavior ..... 1-5
- Engine Control Interface and Power Supply Boards ..... 1-6
- Power Supplies ..... 1-7
- Engine Control and Image Processor Boards ..... 1-8
- Auxiliary Feeder Control Board ..... 1-9
- Print Engine Sensors and Switches ..... 1-10
- Print Engine Sensors and Switches (cont'd.) ..... 1-11
- Auxiliary Feeder Sensors and Switches ..... 1-12
- Auxiliary Feeder Actuators and Clutches ..... 1-13
- Print Engine Solenoids, Actuators, and Clutches ..... 1-14
- Print Engine and Auxiliary Feeder Interlocks and Sensors ..... 1-15
- Image Processor Board ..... 1-16
- Assemblies of the Print Engine ..... 1-17
- Assemblies of the Print Engine (cont'd.) ..... 1-18
- Assemblies of the Print Engine (cont'd.) ..... 1-19
- Auxiliary Feeder Assemblies ..... 1-20

Front Panel Description ..... 1-21
- LED indicators ..... 1-21
- Front Panel Shortcuts ..... 1-22

Rear Panel ..... 1-23
- Connectors ..... 1-23

Printer Specifications 1-24
- Physical Dimensions and Clearances ..... 1-24
- Supported Paper Weights, Page Sizes and Print Area ..... 1-27


# Diagnostics, Error Codes and Messages 2-31


Error Messages 2-31

Troubleshooting Error Codes 2-31
- Chain / Link ..... 2-31
- Where do they come from? ..... 2-31
- Why are they here? ..... 2-31
- System Boot Sequence ..... 2-32
- Power On Self Test (POST) ..... 2-32
- POST Faults ..... 2-33
- Fault Reporting Devices ..... 2-33
- LED Blink Patterns ..... 2-33
- POST Diagnostics Test Descriptions ..... 2-34

Service Diagnostics ..... 2-35

Entering Service Diagnostics Mode ....2-35
Service Diagnostics Test Menu Functions ....2-36
Error Codes and Messages Troubleshooting ....2-46
Voltage Measurements ....2-46
Fuser Connector Pin Locations ....2-47

## Troubleshooting 3-87

Troubleshooting Network Problems ....3-88
Operating System and Application Problems ....3-88
Media Jams and the Paper Path ....3-88
Print Image Quality Problems ....3-88
Troubleshooting Power Supplies and Interlocks ....3-89
Troubleshooting AC Power ....3-89
Troubleshooting the Low-voltage Power Supplies ....3-89
Troubleshooting the +3.3 VDC and +5 VDC LVPS ....3-90
Troubleshooting the +24 VDC LVPS ....3-90
Interlock Circuit Diagram ....3-91
The +24 VDC Interlock Circuit ....3-91
The +5 VDC Interlock Circuit ....3-92
Troubleshooting When the Printer Does Not Come to a “Ready” State ....3-93
Printer Does Nothing When Power Switched On ....3-93
Fans On, Front Panel LED Never On ....3-93
Fans On, Front Panel LED is Red, No Front Panel message ....3-93
Front Panel Continually Displays the Xerox Phaser 7700 Splash Screen ....3-93
Front Panel Continually Displays "warming up - please wait" Message ....3-93
Front Panel displays "Fatal Fault Encountered" message ....3-94
Troubleshooting - Printer Comes to a “Ready” State ....3-94
False LH Door, RH Door, or Front Door Open Messages ....3-94
False "Load Paper in Tray [1,2,3,4]" Message ....3-94
False "Tray [1,2,3,4] Missing" Message ....3-94
Tray 1 Will Not Lift ....3-95
Tray 2, 3 or 4 Will Not Lift ....3-95
Tray 2, 3 and 4 Will Not Lift or
Printer Will Not Recognize the Auxiliary Feeder ....3-96
Printer Will Not Recognize the Finisher ....3-96
Troubleshooting the Toner Dispense/Auger/Developer System ....3-97
Checking the Toner Cartridge ....3-97
Checking the Toner Auger System ....3-98
Checking the Developer ATC Sensor ....3-101
Checking the Developer ....3-102
Tips ....3-102
Operation System and Application Problems ....3-104
Macintosh Printing Problems ....3-104

Windows Printing Problems ..... 3-104
Troubleshooting Network Problems ..... 3-105
Media Jams and the Paper Path ..... 3-106
Media-based Problems ..... 3-106
Multiple-sheet Pick ..... 3-106
Mis-pick ..... 3-106
Skewed Image ..... 3-106
Damaged Prints ..... 3-107
Fuser Jams ..... 3-107
Exit Jams ..... 3-107
Print Image Quality Problems ..... 3-108
Light (undertone) Prints (all colors) ..... 3-108
Blank Prints ..... 3-108
One Color is Faded or Missing ..... 3-109
Missing Band in Direction of Paper Travel ..... 3-110
Streaks in Direction of Paper Travel ..... 3-111
Streaks Parallel with the Leading Edge ..... 3-112
Random Missing Spots ..... 3-113
Random Spotting ..... 3-113
Single Color ..... 3-113
All Colors ..... 3-114
Repetitive Mark Appears on Each Print ..... 3-114
Background Contamination ..... 3-115
Unfused Image or Image Easily Rubs Off of Page ..... 3-116
Toner on Back of Print ..... 3-117
Print is Mottled ..... 3-118
Image Mis-registered on Paper ..... 3-119
Residual Image or Ghosting ..... 3-120
Light Bands, Dark Bands, or Mottled Prints ..... 3-121

**Adjustments and Calibration 4-123**

Internal Hard Drive 4-123
Registration Control (RegiCon) Adjustment Overview ..... 4-124
Coarse RegiCon Initialization ..... 4-124
Coarse and Fine Skew Adjustments ..... 4-125
In/Out Skew Adjustment ..... 4-125
Center Skew Adjustment ..... 4-126
Processes of the RegiCon Adjustment ..... 4-127
Check Print-quality ..... 4-127
Preparation for RegiCon ..... 4-127
Registration Control Procedures ..... 4-130
RegiCon Flowchart ..... 4-133
Step 1: Belt Edge Learn ..... 4-134

Step 2: RegiCon #4 Coarse Skew Adjustment ....4-135
Step 3: RegiCon #1 Fine Skew Adjustment ....4-137
Step 4: RegiCon #2 In/Out Skew Adjustment ....4-138
Step 5: RegiCon #3 Center Skew Adjustment ....4-139
Coarse RegiCon Initialization ....4-140
ATC Sensor Setup ....4-142
Additional Information ....4-142

## Cleaning and Maintenance 5-143

Service Preventive Maintenance Procedure ....5-143
Recommended Tools ....5-143
Cleaning ....5-143

## Resetting NVRAM 6-145

PostScript NVRAM Resets ....6-145
Restore Factory Settings (color) ....6-145
Restore Previous Settings (color) ....6-145
Restore Factory Settings (margins) ....6-146
Reset Calibrations (color, margins, paper) ....6-146
Resetting All Printer Default Settings (NVRAM) ....6-146
Resetting Engine NVRAM ....6-146
Resetting Job Defaults ....6-147
Resetting Network Setup Values to Default ....6-147
Resetting Accumulator Belt Life ....6-147
Resetting Belt Cleaner Assembly Life ....6-148
Resetting Transfer Roller Life ....6-148
Service Diagnostics NVRAM Resets ....6-149
PostScript NVRAM Reset ....6-149
Clear Tech Rep Faults ....6-149
Reset CRU Life Counters ....6-149
Reset Engine NVRAM ....6-150
Store Engine NVRAM ....6-150

Rear Cover Assembly 7-154
Right Side Cover Assembly ..... 7-155
Top Cover Assembly ..... 7-156
Front Panel Assembly ..... 7-157
Rear Cover, Top Rear Power Switch Cover and LH Rear Mid Cover ..... 7-158
Left-Hand Lower Cover Assembly ..... 7-160
Front Cover Assembly ..... 7-161
Fuser Front Cover ..... 7-162
Rear Shield ..... 7-163
Rear Shield Bracket ..... 7-164
24 VDC Power Supply Shield ..... 7-165
Multi-Purpose Tray (MPT) Assembly ..... 7-166
Multi-Purpose Tray Paper Pick Rollers ..... 7-167
Left-Hand Cover Assembly (Left-Hand Door) ..... 7-168
Duplex Chute ..... 7-170
Duplex Unit Assembly ..... 7-171
Transfer Roller Assembly (2nd BTR) ..... 7-172
Duplex Transport Assembly ..... 7-173
Fuser Unit ..... 7-174
Registration Transport Assembly ..... 7-175
Shutter Solenoid Assembly ..... 7-176
Tray 1 Feeder Assembly and Paper Lift Motor ..... 7-177
Waste Cartridge Sensor Holder ..... 7-178
Print Cartridge Plate Cover ..... 7-179
Dispense Assembly ..... 7-180
Print Cartridge Plate Assembly ..... 7-182
Developer Housing Assembly ..... 7-185
New Developer Housing Assembly Charging ..... 7-186
Toner Dispense Motor Assembly ..... 7-188
Steering Drive Assembly ..... 7-189
Waste Toner Agitator Motor Assembly ..... 7-190
Mark-On-Belt (MOB) Sensor ..... 7-191
Exit Transport Assembly ..... 7-192
Fuser Fan Assembly ..... 7-195
Accumulator Belt Assembly ..... 7-196
Belt Cleaner Assembly ..... 7-198
Waste Auger Assembly ..... 7-199
Laser Unit ..... 7-200
Image Processor Board Assembly ..... 7-202
Internal Hard Drive ..... 7-203
Electrical Chassis (Card Cage) Assembly ..... 7-204
Engine Control Board ..... 7-206
Engine Control Interface Board ..... 7-207

T1 and T3 High-voltage Power Supplies ....7-208
3.3 VDC and 5 VDC Low-Voltage Power Supplies and Bracket ....7-210
LD Power Relay ....7-211
+24 VDC Low-voltage Power Supply, Fan and Bracket ....7-212
T2 High-Voltage Power Supply ....7-213
Chassis AC Power Assembly ....7-214
Main Drive Assembly ....7-215
Accumulator Belt Drive Assembly ....7-217
Developer Drive Assembly ....7-218
Print Cartridge Drive Assembly ....7-219
Tray 1 Paper-Select Switches ....7-220
Main Lever Assembly
Right and Left-Hand Jacks ....7-221
Auxiliary Feeder Covers ....7-225
Auxiliary Feeder Cover Assembly ....7-226
High-Capacity Feeder (HCF) Tray 3 ....7-227
High-Capacity Feeder (HCF) Tray 4 and Paper Transport ....7-228
Auxiliary Feeder Control Boards ....7-229
Auxiliary Feeders Motor Assemblies ....7-230
Auxiliary Feeder Paper-Select Switches ....7-231
Auxiliary Feeder Paper Feed Motor Assembly ....7-232
Bracket Assembly, Left-Hand and Right-Hand Gear (HCF) ....7-233

**FRU Parts List 8-235**

PL 8-1 Accumulator Belt FRUs ....8-236
PL 8-2 Left-Hand Door FRUs ....8-237
PL 8-3 Media Trays FRUs ....8-239
PL 8-4 Duplex Unit FRUs ....8-240
PL 8-5 Cover FRUs ....8-241
PL 8-6 Cover FRUs (cont'd.) ....8-242
PL 8-7 Cover FRUs (cont'd.) ....8-243
PL 8-8 Switch and Sensor FRUs ....8-245
PL 8-9 Switch and Sensor FRUs (cont'd.) ....8-247
PL 8-10 Circuit Boards FRUs ....8-249
PL 8-11 Power Supplies FRUs ....8-251
PL 8-12 Power Supplies FRUs (cont'd.) ....8-253
PL 8-13 Motors/Drivers FRUs ....8-255
PL 8-14 Electrophotographic Components FRUs ....8-257
PL 8-15 Electrophotographic Components FRUs (cont'd.) ....8-259
PL 8-16 Multi-Purpose Tray FRUs ....8-261
PL 8-17 Paper Feed FRUs ....8-263
PL 8-18 Paper Feed FRUs (cont'd.) ....8-265
PL 8-19 Fans FRUs ....8-267

PL 8-20 Lift Components FRUs ..... 8-268
PL 8-21 Wiring FRUs ..... 8-270
PL 8-22 Auxiliary Feeder FRUs ..... 8-272
PL 8-23 Lower Tray Deck (LTD) FRUs ..... 8-274
PL 8-24 Lower Tray Deck (LTD) FRUs (cont'd.) ..... 8-276
PL 8-25 High-Capacity Feeder FRUs ..... 8-277
PL 8-26 High-Capacity Feeder FRUs (cont'd.) ..... 8-278
PL 8-27 High-Capacity Feeder FRUs (cont'd.) ..... 8-279
PL 8-28 High-Capacity Feeder FRUs (cont'd.) ..... 8-280
PL 8-29 High-Capacity Feeder FRUs (cont'd.) ..... 8-281
Kits ..... 8-282
Manual Packs & Service Manual ..... 8-283
Software ..... 8-284
Supplies and Accessories ..... 8-284
Recommended Service Tools ..... 8-285

**Test Prints 9-287**

Analyzing the Test Print ..... 9-288
Print Color Test Prints ..... 9-289
Diagnostics Mode ..... 9-291

**Wiring Diagrams 10-295**

**Phaser 7700 Finisher 11-313**

Finisher Overview 11-314
General Information ..... 11-315
Assemblies of the Finisher ..... 11-317
Internal Assemblies of the Finisher ..... 11-318
Horizontal Transport Sensor, Interlock, and Switch Locator Map ..... 11-319
Finisher Sensor, Interlock, and Switch Locator Map ..... 11-320
Finisher Sensor, Interlock, and Switch Locator Map ..... 11-321

**Removal and Replacement Procedures 11-323**

Horizontal Transport Assembly ..... 11-324
Horizontal Transport Top Open, Front, and Rear Cover 11-325
Horizontal Transport Entrance Upper Cover Assembly ..... 11-326
Horizontal Transport Belts ..... 11-327

Horizontal Transport Entrance Sensor and Top Tray Full Sensor .....11-328
Gate-In Solenoid Assembly .....11-329
Finisher Covers .....11-330
Stack Height-Sensor Assembly .....11-332
Stacker Paper-Sensor Assembly .....11-333
Set Clamp Clutch and Gear .....11-334
Eject Roll Assembly .....11-335
Finisher Control Board, Bracket, and Shield .....11-336
Stacker Motor Assembly .....11-338
Paddle Shaft .....11-339
Paper Transport Motor (Motor Assembly Main) .....11-340
Cam Bracket Assembly .....11-341
Staple Unit Assembly and Motor .....11-342
Compiler Tray .....11-344

**Finisher FRU Parts List 11-345**

**Finisher Wiring Diagrams 12-371**

# List of Tables


Table 1-1 CRC Life ..... 1-5
Table 1-2 Front Panel Key Descriptions ..... 1-21
Table 1-3 Front Panel Shortcuts ..... 1-22
Table 1-4 Rear Panel DIP Switch Settings ..... 1-23
Table 1-5 Physical Dimensions of the Printer ..... 1-24
Table 1-6 Physical Dimensions of Lower Tray Feeder ..... 1-24
Table 1-7 Functional Specifications ..... 1-25
Table 1-8 Electrical Specifications ..... 1-25
Table 1-9 Environmental Specifications ..... 1-26
Table 1-10 Specialty Paper ..... 1-28
Table 1-11 Print Area ..... 1-28
Table 2-1 POST Diagnostics Test Descriptions ..... 2-34
Table 2-2 Service Diagnostics Test Menu Functions ..... 2-36
Table 8-1 Accumulator Belt FRUs List ..... 8-236
Table 8-2 Left-Hand Door FRUs List ..... 8-238
Table 8-3 Media Trays FRUs List ..... 8-239
Table 8-4 Duplex Unit FRUs List ..... 8-240
Table 8-5 Cover FRUs List ..... 8-241
Table 8-6 Cover FRUs (cont'd.) List ..... 8-242
Table 8-7 Covers FRUs List (cont'd.) ..... 8-244
Table 8-8 Switch and Sensor FRUs List ..... 8-246
Table 8-9 Switch and Sensor FRUs List (cont'd.) ..... 8-248
Table 8-10 Circuit Board FRUs List ..... 8-250
Table 8-11 Power Supplies FRUs List ..... 8-252
Table 8-12 Power Supplies FRUs List (cont'd.) ..... 8-254
Table 8-13 Motors / Drivers FRUs List ..... 8-256
Table 8-14 Electrophotographic Components FRUs List ..... 8-258
Table 8-15 Electrophotographic Components FRUs List (cont'd.) ..... 8-260
Table 8-16 Multi-Purpose Tray (MPT) FRUs List ..... 8-262
Table 8-17 Paper Feed FRUs List ..... 8-264
Table 8-18 Paper Feed FRUs List (cont'd.) ..... 8-266
Table 8-19 Fans FRUs List ..... 8-267
Table 8-20 Lift Components FRUs List ..... 8-269
Table 8-21 Wiring FRUs List ..... 8-271
Table 8-22 Auxiliary Feeders FRUs List ..... 8-273
Table 8-23 Lower Tray Deck (LTD) FRUs List ..... 8-275
Table 8-24 Lower Tray Deck (LTD) FRUs List (cont'd.) ..... 8-276
Table 8-25 High-Capacity Feeder FRUs List ..... 8-277
Table 8-26 High-Capacity Feeder FRUs List (cont'd.) ..... 8-278
Table 8-27 High-Capacity Feeder FRUs List (cont'd.) ..... 8-279

Table 8-28 High-Capacity Feeder FRUs List (cont'd.) ..... 8-280
Table 8-29 High-Capacity Feeder FRUs (cont'd.) ..... 8-281
Table 8-30 Kits ..... 8-282
Table 8-31 Manual Packs & Service Manual ..... 8-283
Table 8-32 Software ..... 8-284
Table 8-33 Supplies ..... 8-284
Table 8-34 Accessories ..... 8-285
Table 8-35 Recommended Tools List ..... 8-285
Table 11-1 Finisher Specifications ..... 11-315
Table 11-2 Finisher Unit Main Assemblies FRUs List ..... 11-346
Table 11-3 Finisher Covers FRUs List ..... 11-347
Table 11-4 Finisher Stand FRUs List ..... 11-349
Table 11-5 Gate Unit FRUs List ..... 11-351
Table 11-6 Horizontal Transport Assembly FRUs List ..... 11-353
Table 11-7 Horizontal Transport Assembly FRUs List (cont'd.) ..... 11-355
Table 11-8 Top Cover and Eject Roll FRUs List ..... 11-357
Table 11-9 Paper Transport Assembly FRUs List ..... 11-359
Table 11-10 Paper Transport Assembly FRUs List (cont'd.) ..... 11-361
Table 11-11 Staple Unit Assembly FRUs List ..... 11-363
Table 11-12 Compiler Tray Assembly FRUs List ..... 11-365
Table 11-13 Stacker Elevator Assembly FRUs List ..... 11-367
Table 11-14 Exit Assembly FRUs List ..... 11-369
Table 11-15 Electrical FRUs List ..... 11-370

# List of Figures


Figure 1-1 The Phaser 7700 Color Laser Printer (shown with the High-Capacity Feeder) 1-1
Figure 1-2 Engine Control Interface and Power Supply Boards ..... 1-6
Figure 1-3 Power Supplies ..... 1-7
Figure 1-4 Engine Control and Image Processor Boards ..... 1-8
Figure 1-5 Auxiliary Feeder Control Board ..... 1-9
Figure 1-6 Print Engine Sensors and Switches ..... 1-10
Figure 1-7 Print Engine Sensors and Switches (cont'd.) ..... 1-11
Figure 1-8 Auxiliary Feeder Sensors and Switches ..... 1-12
Figure 1-9 Auxiliary Feeder Actuators and Clutches ..... 1-13
Figure 1-10 Print Engine Solenoids, Actuators, and Clutches ..... 1-14
Figure 1-11 Print Engine and Auxiliary Feeder Interlocks and Sensors ..... 1-15
Figure 1-12 Image Processor Board ..... 1-16
Figure 1-13 Assemblies of the Print Engine ..... 1-17
Figure 1-14 Assemblies of the Print Engine (cont'd.) ..... 1-18
Figure 1-15 Assemblies of the Print Engine (cont'd.) ..... 1-19
Figure 1-16 Auxiliary Feeder Assemblies ..... 1-20
Figure 1-17 Front Panel ..... 1-21
Figure 1-18 Printer Rear Connections ..... 1-23
Figure 1-19 Printer Clearances ..... 1-24
Figure 2-1 Voltage Measurement Point Locations ..... 2-46
Fig 2-2 Fuser Connector Pin Locations ..... 2-47
Figure 3-1 Circuit Diagram ..... 3-91
Figure 3-2 Toner Cartridge Gear ..... 3-97
Figure 3-3 Toner Cartridge ..... 3-98
Figure 3-4 Toner Dispense Assembly ..... 3-99
Figure 3-5 Toner Port ..... 3-100
Figure 3-6 Developer Housing ..... 3-103
Figure 4-1 Coarse RegiCon Initialization ..... 4-124
Figure 4-2 Coarse and Fine Skew Adjustments ..... 4-125
Figure 4-3 In/Out Skew Adjustment ..... 4-125
Figure 4-4 Center Skew Adjustment ..... 4-126
Figure 4-5 RegiCon Flowchart ..... 4-133
Figure 4-6 Grid 1-Dot Pattern Orientation for A-size Paper ..... 4-140
Figure 4-7 Grid 1-Dot pattern annotations ..... 4-141
Figure 7-1 Rear Cover Assembly ..... 7-154
Figure 7-2 Right Side Cover Assembly ..... 7-155
Figure 7-3 Top Cover Assembly ..... 7-156
Figure 7-4 Control Panel Assembly ..... 7-157
Figure 7-5 Top Rear Power Switch Cover and Left-Hand Rear Mid Cover ..... 7-158

Figure 7-6 Left-Hand Lower Cover Assembly ..... 7-160
Figure 7-7 Front Cover Assembly ..... 7-161
Figure 7-8 Fuser Front Cover ..... 7-162
Figure 7-9 Rear Shield ..... 7-163
Figure 7-10 Rear Shield Bracket ..... 7-164
Figure 7-11 24 VDC Power Supply Shield ..... 7-165
Figure 7-12 MPT Assembly ..... 7-166
Figure 7-13 Multi-Purpose Tray Pick Rollers ..... 7-167
Figure 7-14 Left-Hand Cover Assembly (Left-Hand Door) ..... 7-168
Figure 7-15 Damper Teeth Alignment ..... 7-169
Figure 7-16 Duplex Chute ..... 7-170
Figure 7-17 Duplex Unit Assembly ..... 7-171
Figure 7-18 Transfer Roller Assembly (2nd BTR) ..... 7-172
Figure 7-19 Inverter Transport Assembly ..... 7-173
Figure 7-20 Fuser Unit ..... 7-174
Figure 7-21 Registration Transport Assembly ..... 7-175
Figure 7-22 Shutter Solenoid Assembly ..... 7-176
Figure 7-23 Tray 1 Feeder Assembly ..... 7-177
Figure 7-24 Waste Cartridge, Waste Cartridge Cover and Waste Cartridge Sensor Holder 7-178
Figure 7-25 Print Cartridge Plate Cover (plastic) ..... 7-179
Figure 7-26 Dispense Assembly ..... 7-180
Figure 7-27 Print Cartridge Plate Assembly ..... 7-182
Figure 7-28 Print Cartridge Plate Assembly (cont'd.) ..... 7-183
Figure 7-29 Developer Housing Assembly ..... 7-185
Figure 7-30 Developer Housing Assembly Recharge ..... 7-186
Figure 7-31 Toner Dispense Motor Assembly ..... 7-188
Figure 7-32 Steering Drive Assembly ..... 7-189
Figure 7-33 Waste Toner Agitator Motor Assembly. ..... 7-190
Figure 7-34 Mark-On-Belt Sensor ..... 7-191
Figure 7-35 Exit Transport Assembly ..... 7-192
Figure 7-36 Reconfigured Inverter ..... 7-193
Figure 7-37 Parts No Longer Installed ..... 7-193
Figure 7-38 Interlock Actuator and Spacers ..... 7-194
Figure 7-39 Fuser Fan Assembly ..... 7-195
Figure 7-40 Accumulator Belt Assembly ..... 7-196
Figure 7-41 Belt Cleaner Assembly ..... 7-198
Figure 7-42 Waste Auger Assembly ..... 7-199
Figure 7-43 Laser Unit Assembly ..... 7-200
Figure 7-44 Laser Unit Label ..... 7-201
Figure 7-45 Image Processor Board Assembly. ..... 7-202
Figure 7-46 Internal Hard Drive ..... 7-203
Figure 7-47 Electrical Chassis Assembly ..... 7-204
Figure 7-48 Engine Control Board ..... 7-206
Figure 7-49 Engine Control Interface Board ..... 7-207
Figure 7-50 T1 and T3 High-voltage Power Supplies ..... 7-208

Figure 7-51 3.3 VDC and 5 VDC Low-Voltage Power Supplies ..... 7-210
Figure 7-52 LD Power Relay ..... 7-211
Figure 7-53 Low-voltage Power Supply, Fan and Bracket ..... 7-212
Figure 7-54 T2 High-Voltage Power Supply ..... 7-213
Figure 7-55 Chassis AC Power Assembly ..... 7-214
Figure 7-56 Main Drive Assembly ..... 7-215
Figure 7-57 Accumulator Belt Drive Assembly ..... 7-217
Figure 7-58 Developer Drive Assembly ..... 7-218
Figure 7-59 Print Cartridge Drive Assembly ..... 7-219
Figure 7-60 Tray 1 Paper-Select Switches ..... 7-220
Figure 7-61 Main Lever, Right-Hand and Left-Hand Jacks ..... 7-221
Figure 7-62 Lift Pin Alignment ..... 7-223
Figure 7-63 Cover Screw Location ..... 7-223
Figure 7-64 Cover Removed ..... 7-224
Figure 7-65 Tension Spring Location ..... 7-224
Figure 7-66 Front and Rear Gears Aligned ..... 7-224
Figure 7-67 Auxiliary Feeder Covers ..... 7-225
Figure 7-68 High-Capacity Feeder (HCF) Cover Assembly ..... 7-226
Figure 7-69 High-Capacity Feeder (HCF) Tray 3 ..... 7-227
Figure 7-70 High-Capacity Feeder (HCF) Tray 4 and Paper Transport ..... 7-228
Figure 7-71 LTD Control or HCF Control Board ..... 7-229
Figure 7-72 Transport Motor Assembly ..... 7-230
Figure 7-73 Paper-Select Switches ..... 7-231
Figure 7-74 Paper Feed Motor Assembly and Chute (LTA & HCF) ..... 7-232
Figure 7-75 Bracket Assembly, Gear RH & Gear LH (HCF) ..... 7-233
Figure 8-1 Accumulator Belt FRUs ..... 8-236
Figure 8-2 Left-Hand Door FRUs ..... 8-237
Figure 8-3 Media Trays FRUs ..... 8-239
Figure 8-4 Duplex Unit FRUs ..... 8-240
Figure 8-5 Cover FRUs ..... 8-241
Figure 8-6 Cover FRUs (cont'd.) ..... 8-242
Figure 8-7 Cover FRUs (cont'd.) ..... 8-243
Figure 8-8 Switch and Sensor FRUs ..... 8-245
Figure 8-9 Switch and Sensor FRUs (cont'd.) ..... 8-247
Figure 8-10 Circuit Boards FRUs ..... 8-249
Figure 8-11 Power Supplies FRUs ..... 8-251
Figure 8-12 Power Supplies FRUs (cont'd.) ..... 8-253
Figure 8-13 Motors/Drivers FRUs ..... 8-255
Figure 8-14 Electrophotographic Components FRUs ..... 8-257
Figure 8-15 Electrophotographic Components FRUs (cont'd.) ..... 8-259
Figure 8-16 Multi-Purpose Tray FRUs ..... 8-261
Figure 8-17 Paper Feed FRUs ..... 8-263
Figure 8-18 Paper feed FRUs (cont'd.) ..... 8-265
Figure 8-19 Fans FRUs ..... 8-267
Figure 8-20 Lift Components FRUs ..... 8-268
Figure 8-21 Wiring FRUs ..... 8-270

Figure 8-22 Auxiliary Feeder FRUs ..... 8-272
Figure 8-23 Lower Tray Deck (LTD) FRUs ..... 8-274
Figure 8-24 Lower Tray Deck (LTD) FRUs (cont'd.) ..... 8-276
Figure 8-25 High-Capacity Feeder FRUs ..... 8-277
Figure 8-26 High-Capacity Feeder FRUs (cont'd.) ..... 8-278
Figure 8-27 High-Capacity Feeder FRUs (cont'd.) ..... 8-279
Figure 8-28 High-Capacity Feeder FRUs (cont'd.) ..... 8-280
Figure 8-29 High-Capacity Feeder FRUs (cont'd.) ..... 8-281
Figure 11-1 Phaser 7700 Color Laser Printer with the Finisher Option ..... 11-313
Figure 11-2 Dimensions of the Finisher ..... 11-315
Figure 11-3 Assemblies of the Finisher ..... 11-317
Figure 11-4 Internal Assemblies of the Finisher ..... 11-318
Figure 11-5 Horizontal Transport Sensor, Interlock and Switch Locator Map ..... 11-319
Figure 11-6 Finisher Sensor, Interlock, and Switch Locator Map ..... 11-320
Figure 11-7 Finisher Sensor, Interlock, and Switch Locator ..... 11-321
Figure 11-8 Horizontal Transport Assembly ..... 11-324
Figure 11-9 H-Transport Top Open, Front and Rear Covers ..... 11-325
Figure 11-10 Horizontal Transport Entrance Upper Cover ..... 11-326
Figure 11-11 Horizontal Transport Belts ..... 11-327
Figure 11-12 H-Tra Entrance and Top Tray Full Sensor ..... 11-328
Figure 11-13 H-Transport Gate-In Solenoid ..... 11-329
Figure 11-14 Finisher Covers ..... 11-330
Figure 11-15 Stack Height-Sensor Assembly ..... 11-332
Figure 11-16 Stacker Paper-Sensor Assembly ..... 11-333
Figure 11-17 Set Clamp Clutch and Gear ..... 11-334
Figure 11-18 Eject Roll ..... 11-335
Figure 11-19 Finisher Control Board, Bracket, and Shield ..... 11-336
Figure 11-20 Stacker Motor Assembly ..... 11-338
Figure 11-21 Paddle Shaft ..... 11-339
Figure 11-22 Paper Transport Motor ..... 11-340
Figure 11-23 Cam Bracket Assembly ..... 11-341
Figure 11-24 Staple Unit Assembly ..... 11-342
Figure 11-25 Compiler Tray ..... 11-344
Figure 11-26 Finisher Unit Main Assemblies FRUs ..... 11-345
Figure 11-27 Finisher Covers FRUs ..... 11-347
Figure 11-28 Finisher Stand FRUs ..... 11-348
Figure 11-29 Gate Unit FRUs ..... 11-350
Figure 11-30 Horizontal Transport Assembly FRUs ..... 11-352
Figure 11-31 Horizontal Transport Assembly FRUs (cont'd.) ..... 11-354
Figure 11-32 Top Cover and Eject Roll FRUs ..... 11-356
Figure 11-33 Paper Transport Assembly FRUs ..... 11-358
Figure 11-34 Paper Transport Assembly FRUs (cont'd.) ..... 11-360
Figure 11-35 Staple Unit Assembly FRUs ..... 11-362
Figure 11-36 Compiler Tray Assembly FRUs ..... 11-364
Figure 11-37 Stacker Elevator Assembly FRUs ..... 11-366
Figure 11-38 Exit Assembly FRUs ..... 11-368

Figure 11-39 Electrical FRUs ..... 11-370
Figure 12-1 Block diagram of the Finisher ..... 12-372
Figure 12-2 Wiring diagram of the Finisher ..... 12-373

# General Information

The Phaser 7700 Color Laser Printer Service Manual is the primary document used for repairing and maintaining the Xerox Phaser 7700 Color Laser Printer.

Certification for servicing of this product requires completion of the Phaser 7700 printer service training.

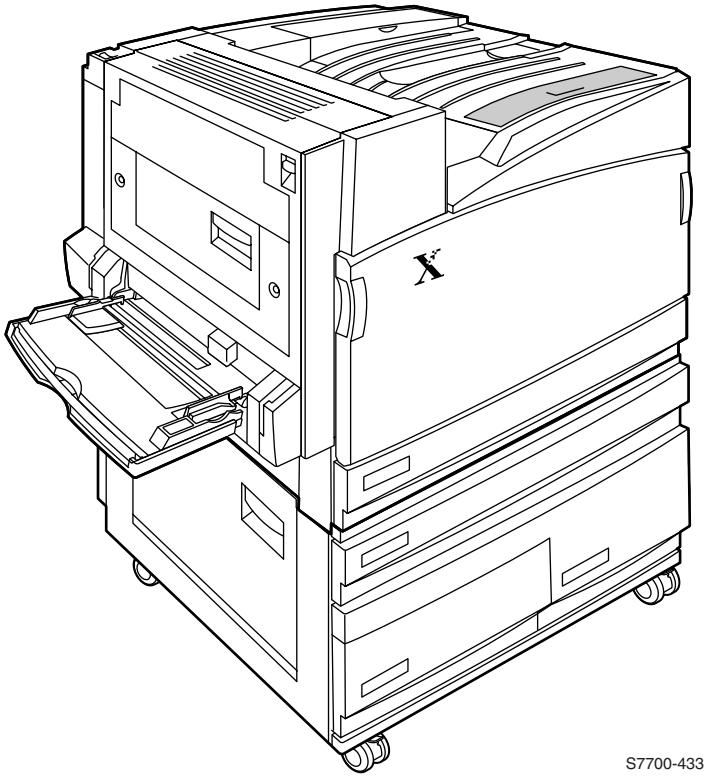


**Figure 1-1 The Phaser 7700 Color Laser Printer (shown with the High-Capacity Feeder)**

# Phaser 7700 Printer Overview

The Phaser 7700 Color Printer combines a single-pass, tandem-design, color laser, continuous-tone print engine with an image processor supporting Adobe's PostScript 3 description language. The image processor features a bi-directional parallel interface, a USB port, and a 100baseT Ethernet port for host communication. The PCL5C printer language is also supported.

The 7700 printer prints at a standard resolution of 600 x 1200 dots-per-inch with bi-level dots and at a high resolution of 600 x 600 dots-per-inch with variable dot sizing. The printer can print up to 22 A/A4-size pages per minute.

All printers feature an Internal Hard Drive for font storage, storing print files, print collation support, and a "check print before proceeding" mode. The hard drive also contains printer documentation accessible via a web browser. The printer contains 136 standard, built-in fonts.

All printers feature a built-in duplex unit, which supports printing on both sides of a sheet of paper.

The printer features a built-in, 100-sheet multi-purpose tray from which specialty media, card stock, larger format paper, and envelopes can be fed. The printer also supports manual feeding using the Multi-Purpose Tray.

The Lower Tray Assembly is available with three additional 500-sheet universal media trays. A High-Capacity Feeder is also available which features two high-capacity A/A4-size trays and one 500-sheet universal tray. An optional 1000-sheet, high-capacity stapler/stacker is available with the Lower Tray Deck or High-Capacity Feeder. The printer is marketed in three versions:

- The **Phaser 7700 DN** Printer comes standard with 128 Mbytes of RAM.
- The **Phaser 7700 GX** Printer features 256 MB of RAM, a three-tray Lower Tray Deck, and PhaserMatch 7700 ICC Color Matching Software.
- The **Phaser 7700 DX** Printer features 256 MB of RAM, a High-Capacity Feeder and Finisher.

RAM memory in the printers can be supplemented with one additional 64-, 128- or 256-Mbyte RAM SODIMMs; the maximum usable capacity is 512 MB in the printer's two memory slots

After being idle for the selected amount of time the printer switches into its ENERGY STAR™ mode where it consumes less than 45 watts of power. It "awakens" upon receiving data at any of its ports.

### Proof Jobs

A proof job is a specific case of a multiple-copy job. With a proof job, the customer assigns a password and copy account at the client workstation before printing. The first set of prints are printed immediately. The original number of requested sets are printed after the customer enters the matching password on the printer's control panel. The customer has the option of printing the original number of requested sets or deleting the job. Since more than one job may be associated with the same password, the customer can print all the jobs, delete all the jobs, or select or delete individual jobs. A proof job that has not been printed is retained on the built in Internal Hard Drive through power cycles.

### Secure Jobs

Secure printing allows the customer to defer printing of a job until a matching password is entered from the control panel. The customer assigns the password at the client workstation before printing. The job is stored, and printing is delayed until the password is entered on the printer's control panel. Since more than one job can have the same password, all secure jobs with the same password are printed. A secure job that has not been printed or released is retained on the Internal Hard Drive through power cycles.

### Saved Jobs

Saved print allows the user to save print jobs to the internal hard drive of the printer. The print job is not deleted after printing, it is stored on the hard drive for print on demand. This function requires the internal hard drive.

**Note** For additional service information, refer to the Service CD-ROM or the Xerox Service Website: http://cpidserv.opbu.xerox.com.

## Printer RAM and Printer Capabilities

The printer features two slots which accept 64, 128 and 256 Mbytes of SDRAM. All combinations are allowed for configurations of 128, 192, 256, 320, 384, and 512 Mbytes.

- 144 pin SODIMM
- Serial presence detect
- 3.3 volt
- 100 MHz PC100 or 133 MHz PC133

The Startup Page and the Configuration Page list the amount of RAM installed in the printer.

If memory does not meet the above specifications it will be ignored by the printer.

With more memory the printer gains the capabilities of printing without having to use image compression (which trades less installed RAM for longer image processing time) and dual frame buffers for printing one image while processing a second image (which gives greater printing throughput).

The printer features two slots each which can contain a 64-, 128-, or 256-Mbyte SDRAM. Any slot may be used for any size memory module. SDRAM memory totalling beyond 512 Mbytes will be ignored.

For acceptable memory, see “Supplies and Accessories” on page 8-284.

## CRC Life Counter Behavior

Internal counters track Customer-Replaceable Consumables (CRC) life usage and store the values in NVRAM. The Image Processor Board monitors these counters in order to display the near end-of-life and end-of-use messages.

**Table 1-1 CRC Life**

| Accessory | | Shelf Life from Manufacturer | |
|---|---|---|---|
| Print Cartridge | | 15 Months | 24k color mode (K in B&W mode)<br>31.2k B&W mode on CMY units |
| Toner Cartridge Black | Extended<br>Standard | 24 Months<br>24 Months | 12k at 5% coverage<br>5k at 5% coverage |
| Toner Cartridge C, M, Y | Extended<br>Standard | 24 Months<br>24 Months | 10k at 5% coverage<br>4k at 5% coverage |
| 2nd Transfer Roller Kit | | 24 Months | 100k, less w/duplex printing |
| Fuser Assembly | | 24 Months | 60K Letter/A4 pgs, 24 lb. paper |
| Accumulator Belt | | 24 Months | 300K |
| Accumulator Belt Cleaner | | 24 Months | 100k |
| Waste Toner Cartridge | | 24 Months | 6k, less with media pick jams |

# Engine Control Interface and Power Supply Boards

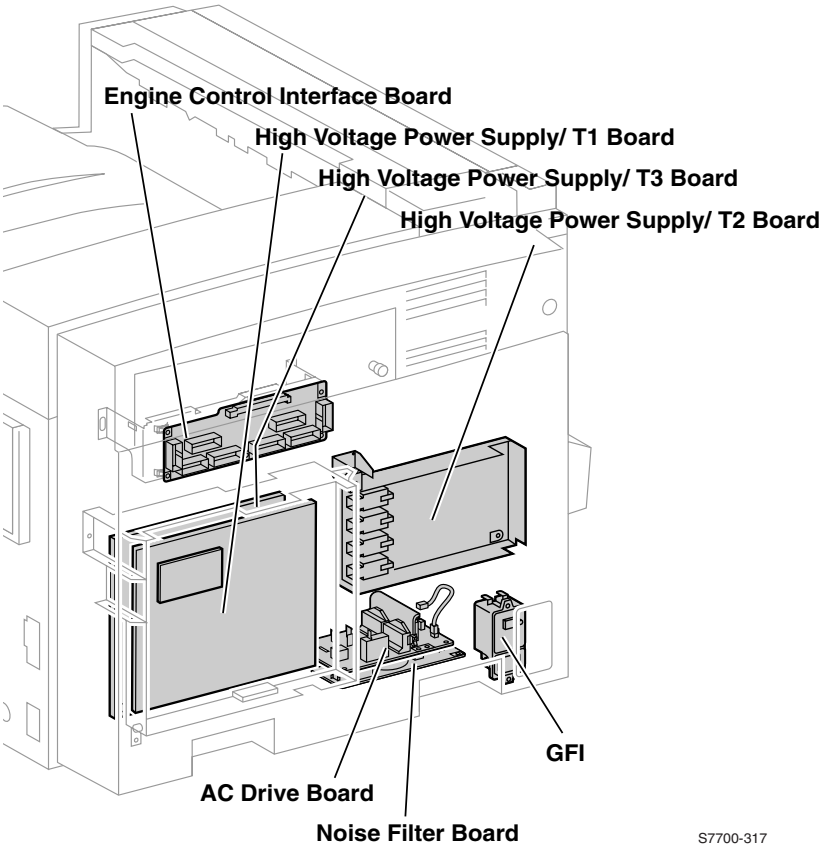


**Figure 1-2 Engine Control Interface and Power Supply Boards**

# Power Supplies

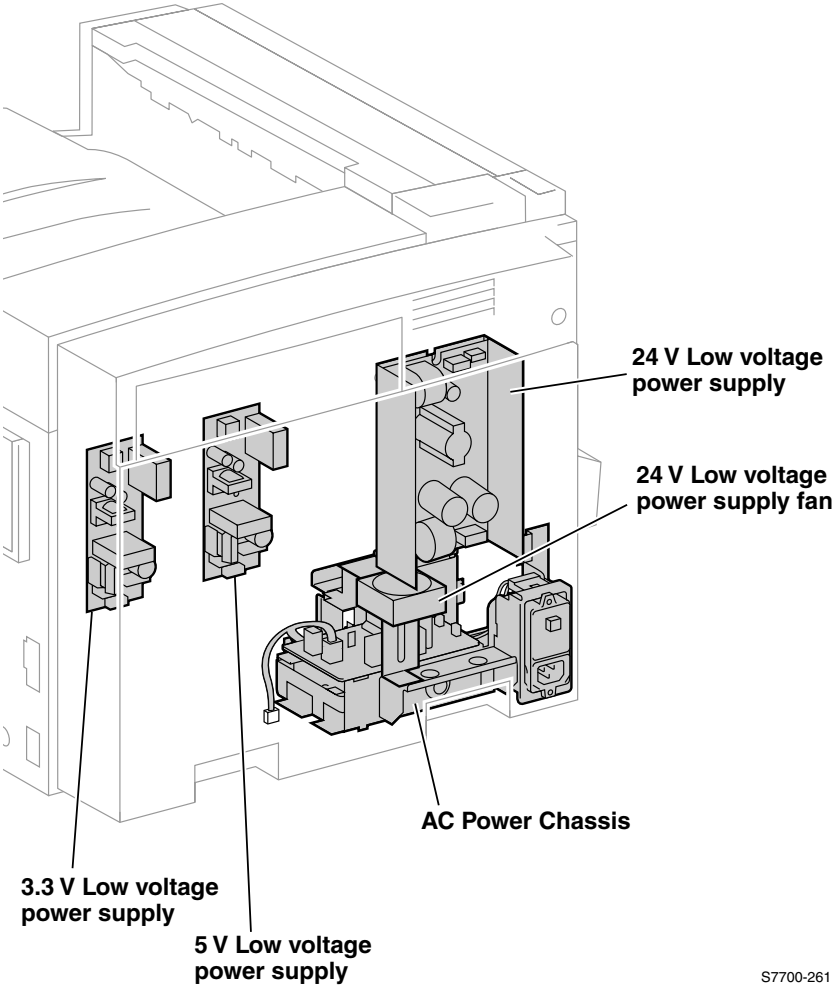


**Figure 1-3 Power Supplies**

# Engine Control and Image Processor Boards

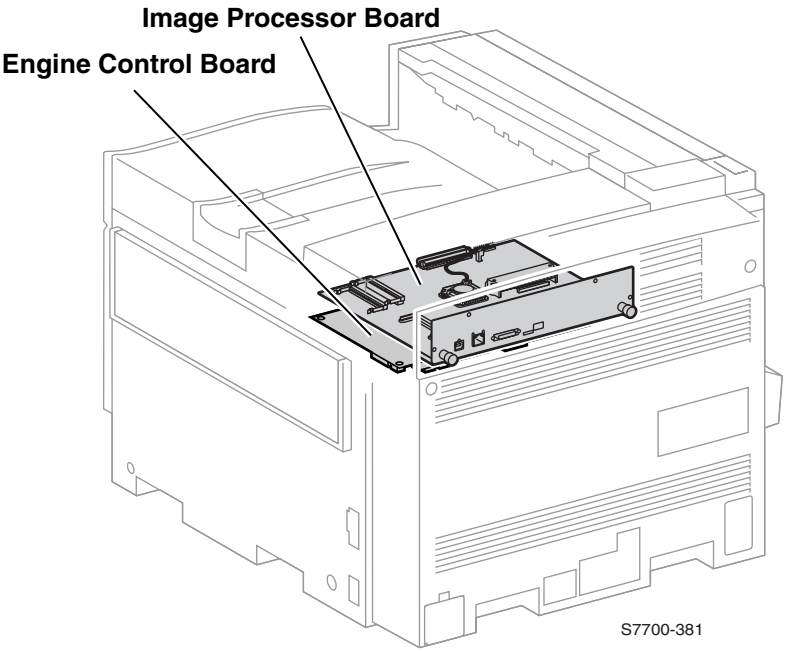


**Figure 1-4 Engine Control and Image Processor Boards**

# Auxiliary Feeder Control Board

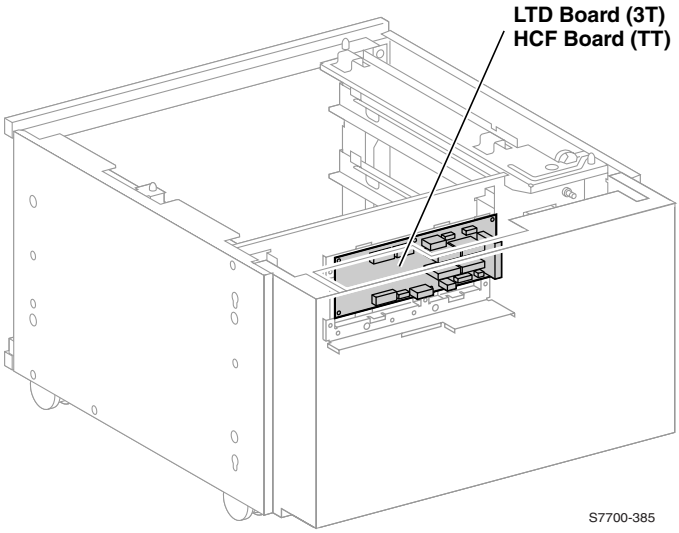


**Figure 1-5 Auxiliary Feeder Control Board**

# Print Engine Sensors and Switches

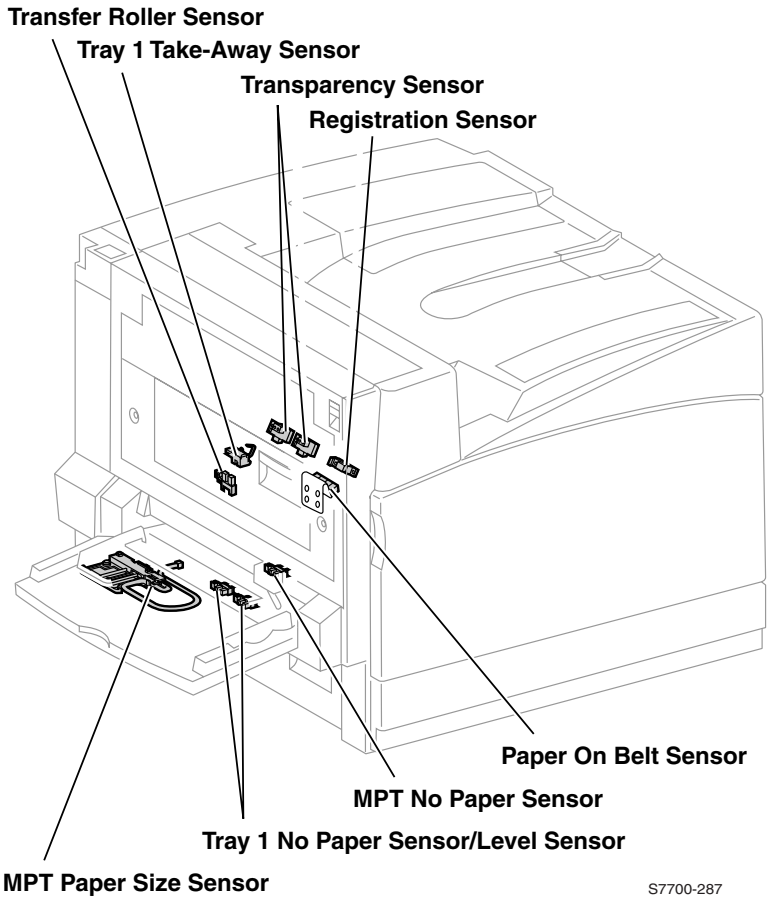


**Figure 1-6 Print Engine Sensors and Switches**

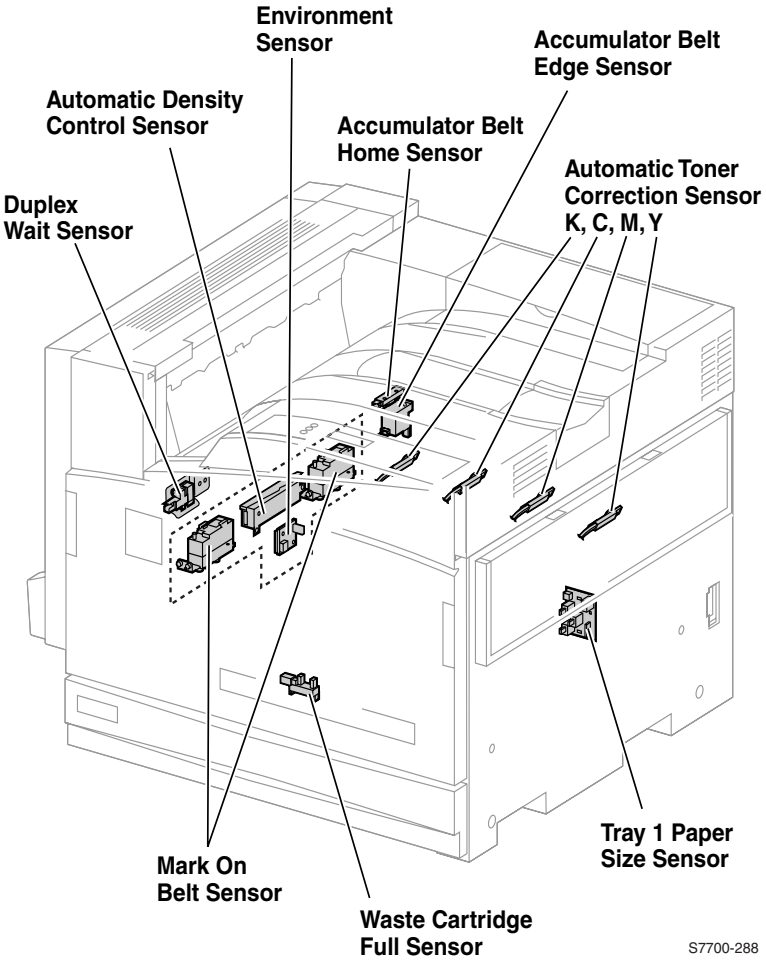


**Figure 1-7 Print Engine Sensors and Switches (cont'd.)**

# Auxiliary Feeder Sensors and Switches

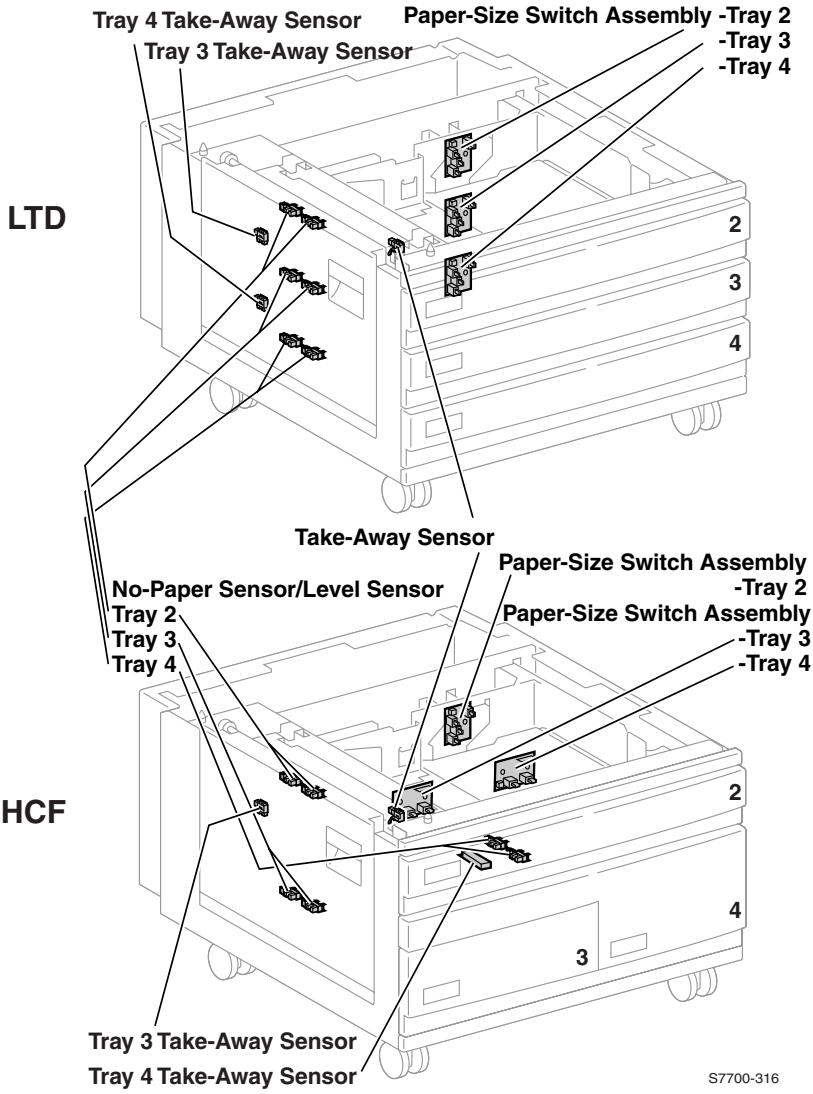


**Figure 1-8 Auxiliary Feeder Sensors and Switches**

# Auxiliary Feeder Actuators and Clutches

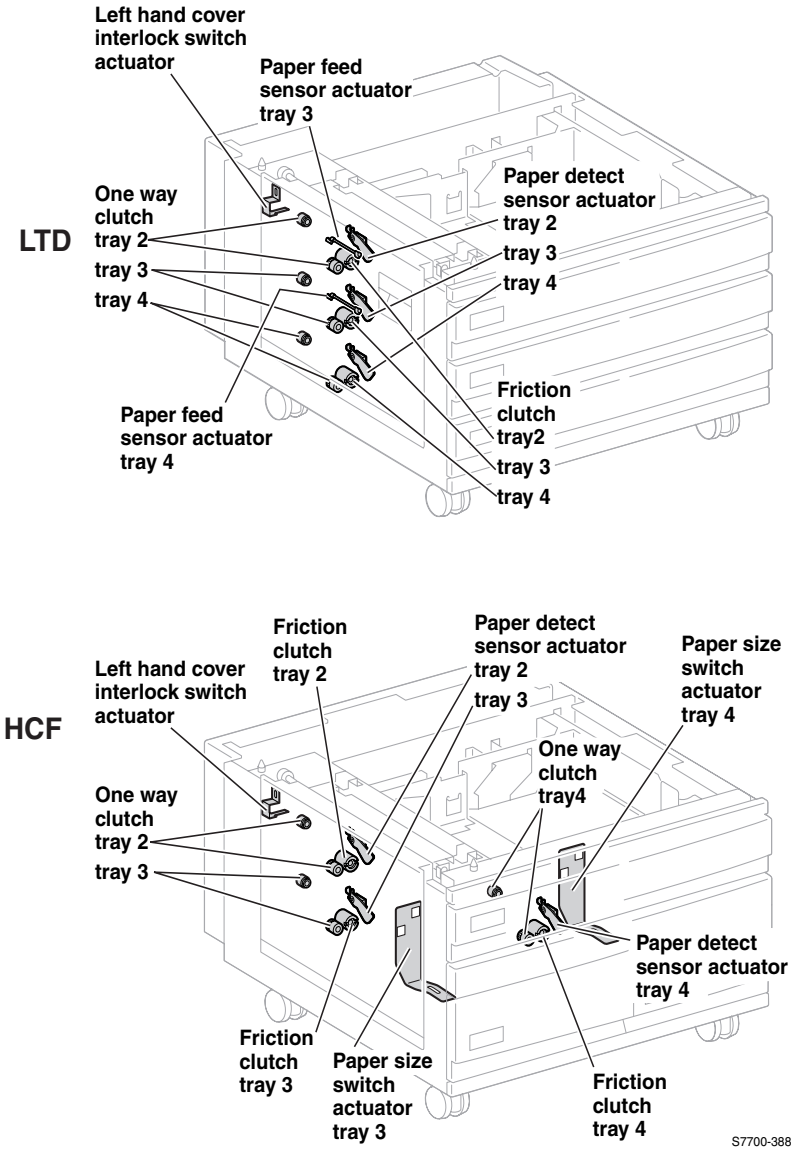


**Figure 1-9 Auxiliary Feeder Actuators and Clutches**

# Print Engine Solenoids, Actuators, and Clutches

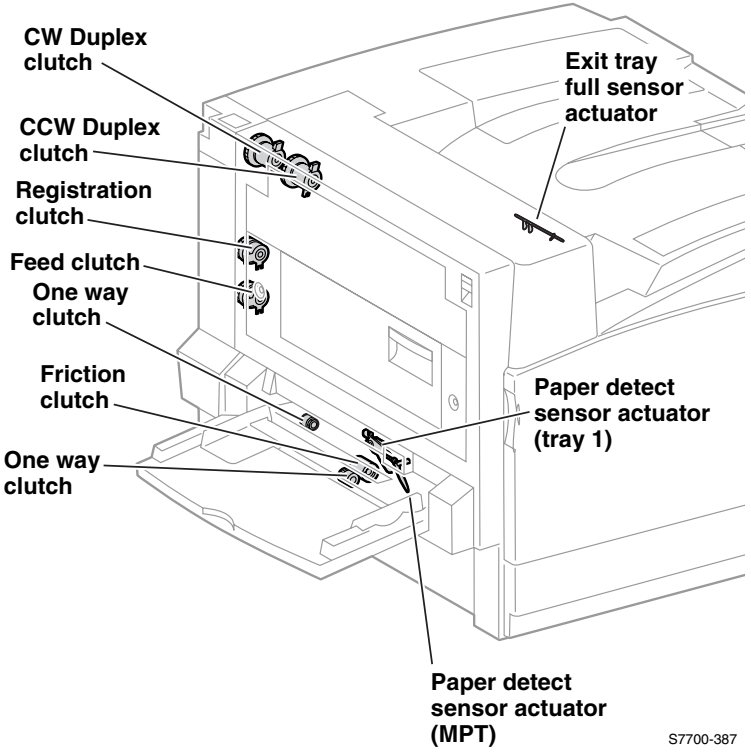


**Figure 1-10 Print Engine Solenoids, Actuators, and Clutches**

# Print Engine and Auxiliary Feeder Interlocks and Sensors

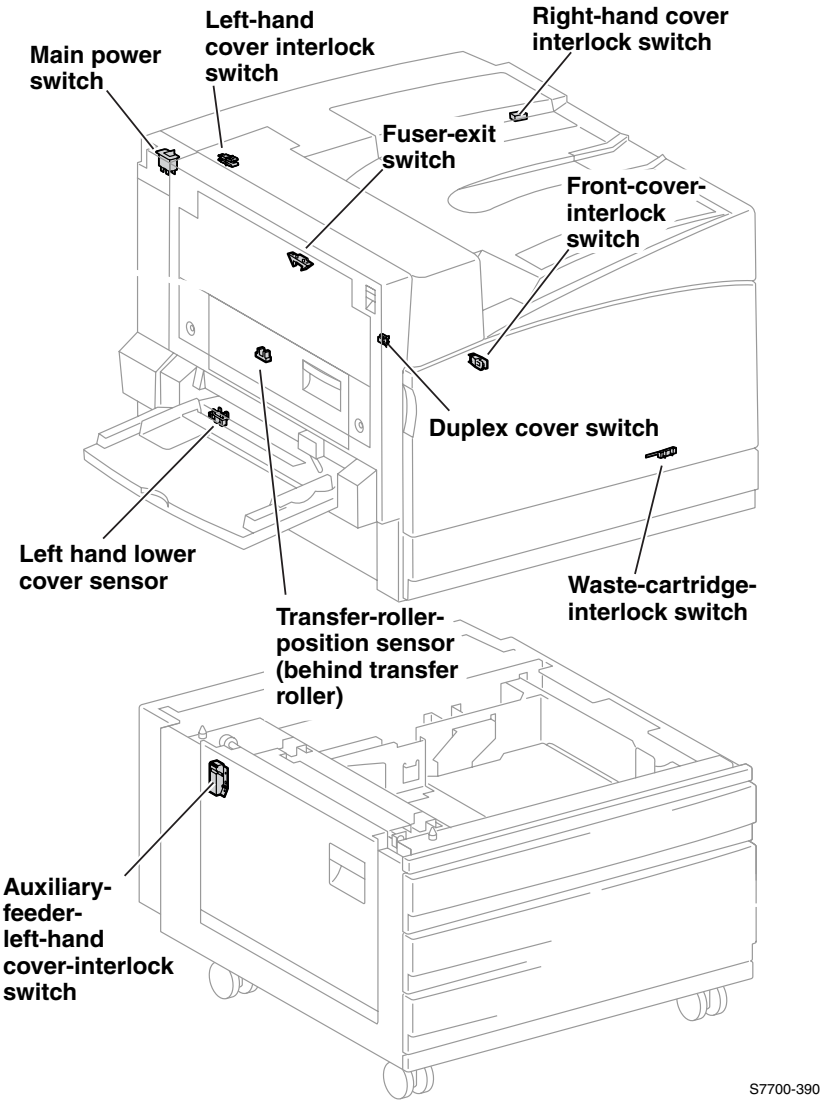


**Figure 1-11 Print Engine and Auxiliary Feeder Interlocks and Sensors**

# Image Processor Board

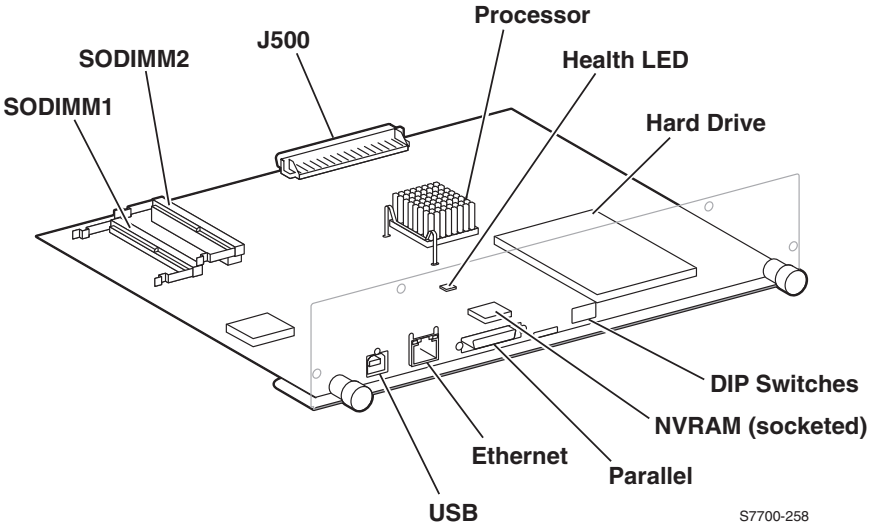


**Figure 1-12 Image Processor Board**

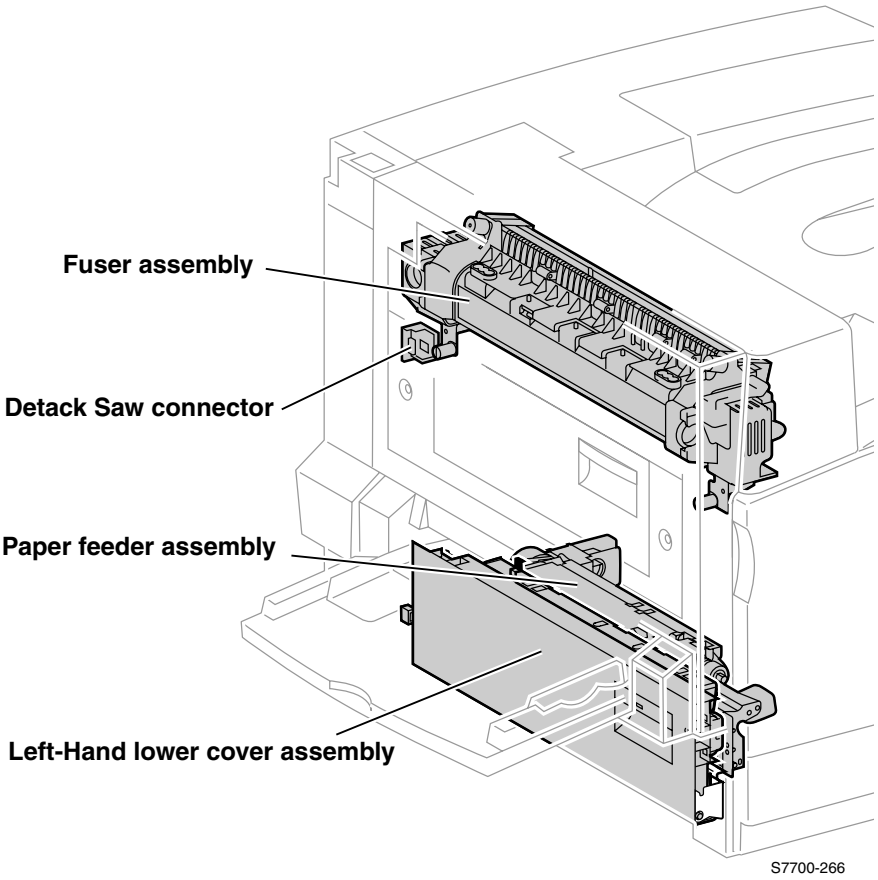


**Figure 1-13 Assemblies of the Print Engine**

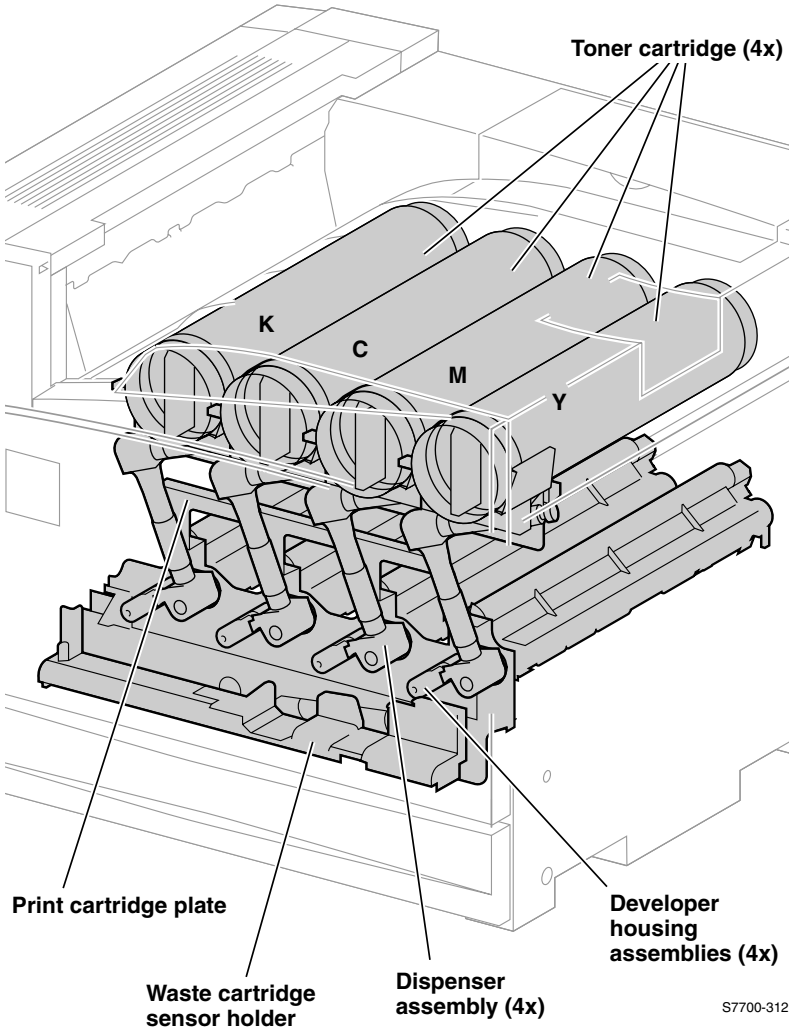


**Figure 1-14 Assemblies of the Print Engine (cont'd.)**

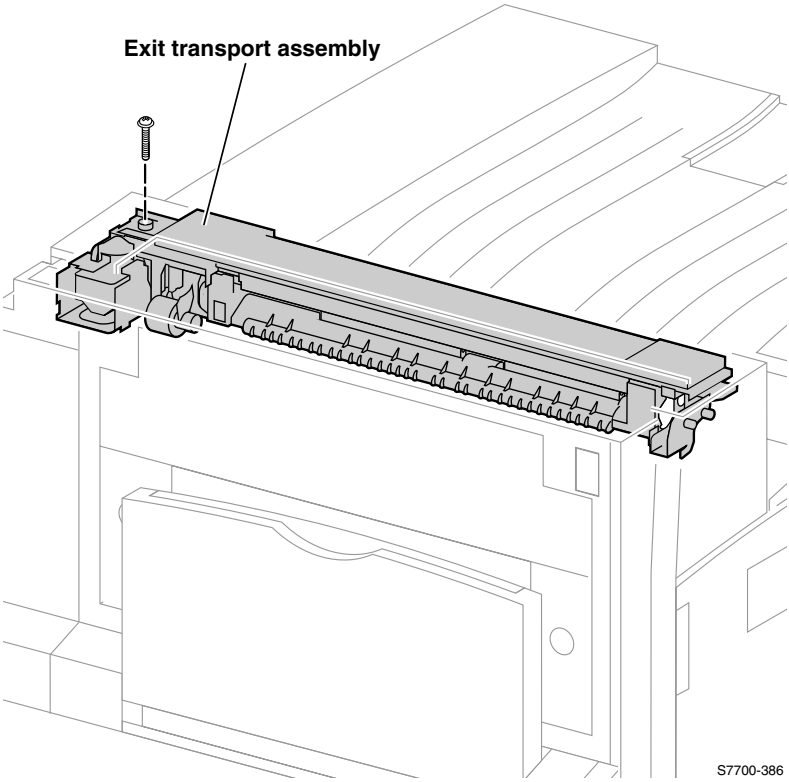


**Figure 1-15 Assemblies of the Print Engine (cont'd.)**

# Auxiliary Feeder Assemblies

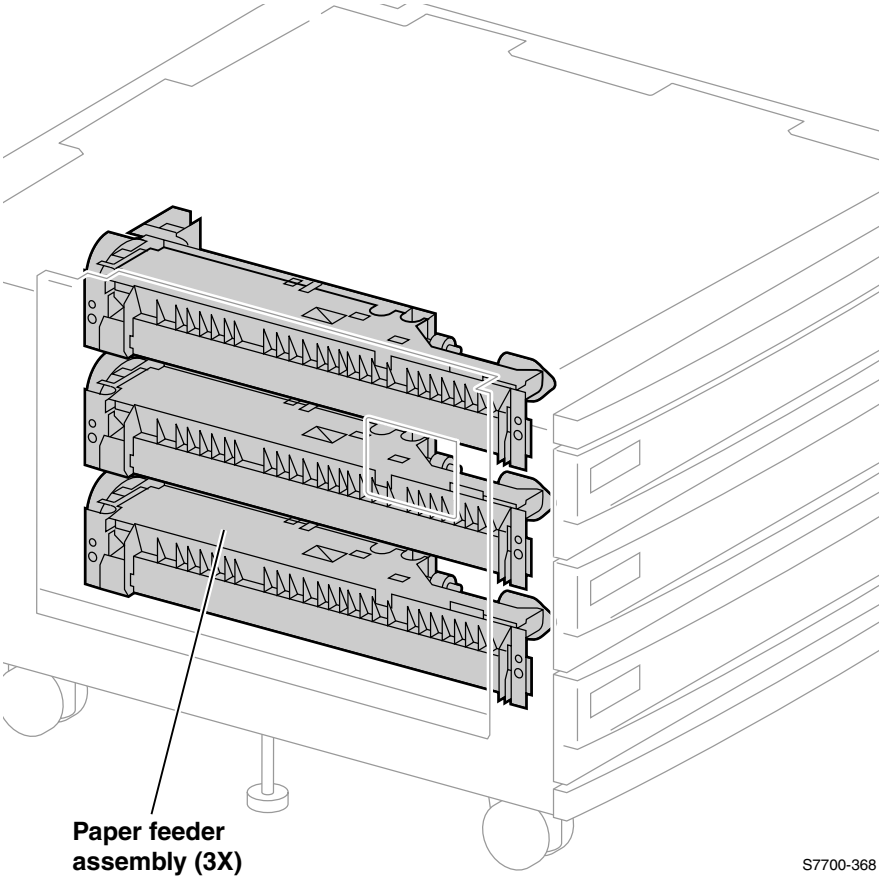


**Figure 1-16 Auxiliary Feeder Assemblies**

**Note** The High-Capacity Feeder has a Tandem Tray design with three Paper Feeder Assemblies, two on the left and one on the right side of the Printer.

# Front Panel Description

The Front Panel consists of one tricolor LED, a display window and six functional keys. These keys navigate the menu system, perform functions and select modes of operation for the printer.

## LED indicators

- Green = Ready to print/printing
- Flashing Green = Receiving or Processing Data
- Yellow = Warning
- Red = Fatal Error

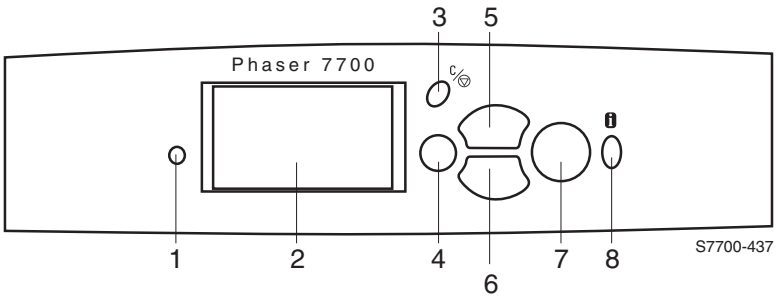


**Figure 1-17 Front Panel**

**Table 1-2 Front Panel Key Descriptions**

| | | | |
|---|---|---|---|
| **1** | LED (Power/Status) | **5** | Up Arrow Button - moves up the menu system |
| **2** | Graphic front panel display | **6** | Down Arrow Button - moves down the menu system |
| **3** | Cancel Button | **7** | OK (select) Button |
| **4** | Back Button | **8** | Information Button - for additional explanation or help |

## Front Panel Shortcuts

You can perform several service tasks by using the options shown in the table.

**Table 1-3 Front Panel Shortcuts**

| Mode | Press this selection at Power On |
|---|---|
| Skip execution of POST diagnostics | OK |
| Print service diagnostics map | INFO |
| Reset PostScript NVRAM | BACK+OK |
| Password Bypass | UP+DOWN |
| Enter Service Diagnostics | BACK+INFO |

# Rear Panel

## Connectors

The rear panel of the printer features the host interface connectors and DIP Switches:

- USB port
- Twisted Pair 10/100T Ethernet connector
- Bi-directional parallel (high-density connector)
- DIP Switches.

The following figure illustrates the rear connections panel of the printer.

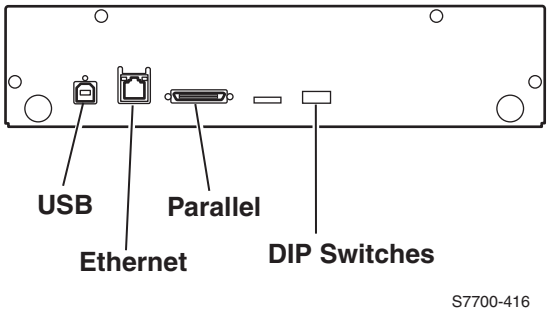


**Figure 1-18 Printer Rear Connections**

**Table 1-4 Rear Panel DIP Switch Settings**

| Function | Switch 1 | Switch 2 | Switch 3 | Switch 4 |
|---|---|---|---|---|
| Normal (Customer) operating mode | UP | UP* | UP* | UP |
| Service mode | UP | DOWN | UP | UP |
| Reset printer | UP* | UP* | UP* | DOWN then UP** |
| Disaster Recovery mode (engineering use only) | DOWN | UP | DOWN | UP |
| Development mode (engineering use only | DOWN | DOWN | DOWN* | UP |

* Recommended DIP switch position
** If DIP switch 4 is left in the down position, the printer will not turn Off.

# Printer Specifications

## Physical Dimensions and Clearances

### Table 1-5 Physical Dimensions of the Printer

| Dimension | Value |
|---|---|
| Height | 493 mm (19.4 in.) Print Engine<br>857 mm (48. in.) with lower tray deck |
| Width | 644 mm (25.4 in.) |
| Depth | 682 mm (26.9 in.) |
| Weight | 82 kg (180 lbs.) with consumables installed<br>122 kg (267 lbs.) with lower tray (high-capacity) feeder |

### Table 1-6 Physical Dimensions of Lower Tray Feeder

| Dimension | Value |
|---|---|
| Height | 41.4 cm (16.3 in.) |
| Width | 56 cm (22 in.) |
| Depth | 56 cm (22 in.) |
| Weight | 23.5 kg (52 lbs.) |

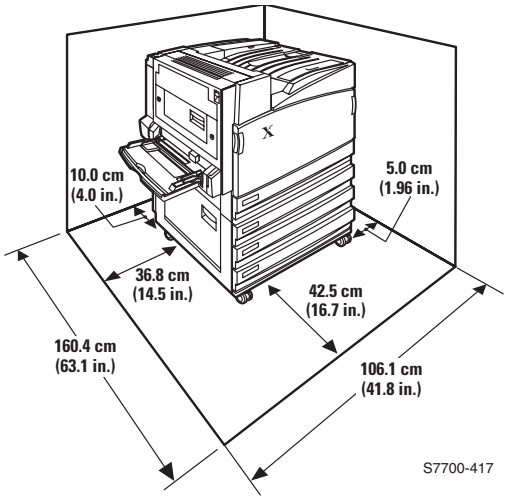


**Figure 1-19 Printer Clearances**

### Table 1-7 Functional Specifications

| Characteristic | Specification |
|---|---|
| Printing Process | The Printer uses laser print heads with an electrophotographic four-color (CMYK) tandem architecture and intermediate transfer printing process. |
| Color Medium | Four toner cartridges each containing one of four colors: CMYK |
| Addressability | 600 x 600 x 1-bit dpi (OHP)<br>1200 x 600 x 1-bit dpi (standard)<br>600 x 600 x 3-bit+1-level dpi (photo) |
| Print Speed | Normal<br>Letter/A4 LEF (Long-Edge Feed): 22 pages per minute<br>Tabloid/A3 SEF (Short-Edge Feed): 11 pages per minute<br>Legal SEF: 13 pages per minute<br>Duplex<br>Letter/A4 LEF: 18 pages per minute<br>Tabloid/A3 SEF: 8 pages per minute<br>Legal SEF: 9 pages per minute |
| Minimum Margins | 5 mm (0.2 in.) on all sides |
| Tray Capacities | Main Tray:<br>Standard paper: 500 sheets<br>Transparency: 100 sheets<br>Lower feeder deck:<br>Standard paper: 1,500 sheets (3 x 500)<br>Multi-purpose tray:<br>Standard paper/Letterhead: 100 sheets<br>High-capacity feeder<br>Standard paper: 2500<br>(1) 500 sheets<br>(2) 867 sheets<br>(3) 1133 sheets |

### Table 1-8 Electrical Specifications

| Characteristic | Specification |
|---|---|
| Primary Line Voltage | 115/127 VAC 10A (+/- 10%)<br>200/240 VAC 5A (+/- 10%) |
| Line Frequency Range | 100-127 VAC, 50/60 Hz<br>220-240 VAC, 50/60 Hz |
| Power Consumption | Energy Star: 45 watts<br>Standby: 130 watts<br>Ready: 220 watts<br>Continuous<br>Printing: 220 to 600 watts average<br>Peak (warming up) to 1100 watts |

**Table 1-9 Environmental Specifications**

| Characteristic | Specification |
|---|---|
| Temperature: | |
| Operating | 10 to 32° C |
| Storage | -20 to 50° C |
| Humidly: | |
| Operating | 10 to 85% relative humidity |
| Storage | 30 to 85% relative humidity |
| Altitude | 0 to 2500 m (8000 ft.) at 25° C |
| Acoustic Noise | |
| Idle: | 38.3 db |
| Printing: | 54.8 db with impulse noise of 63.3 db |

# Supported Paper Weights, Page Sizes and Print Area

## Supported Paper Sizes

The table identifies the paper weights that can be placed in each tray: **Laser Paper** with the following weights: 60-90 g/m$^2$ (16-24 lb. bond, 40-60 lb. book); **Heavy Laser Paper** with the following weights: 91-105 g/m$^2$ (25-28 lb. bond, 61-71 lb. book); **Thin Cover/ Index** with the following weights: 106-169 g/m$^2$ (50-60 lb. cover, 65-90 lb. index, 32-40 lb. bond) and **Thick Cover/Index** with the following weights: 170-220 g/m$^2$ (65-80 lb. cover, 100-110 lb. Index).

| Paper Size | Universal Tray 1 | Universal Trays 2- 4[a] | Multi-Purpose Tray | High-capacity Trays (3-4) |
|---|---|---|---|---|
| Statement (5.5 x 8.5 in.) | • | • | • | |
| Executive (7.25 x 10.5 in.) | | | • | |
| 8 x 10 in. | • | • | • | |
| UK Foolscap (8 x 13 in.) | | | • | |
| A/Letter (8.5 x 11 in.) | • | • | • | • |
| US Folio (8.5 x 13 in.) | • | • | • | |
| Legal (8.5 x 14 in.) | • | • | • | |
| B/Tabloid (11 x 17 in.) | • | • | • | |
| Tabloid Extra (12 x 18 in.) | | | • | |
| A6 (105 x 148 mm) | | | • | |
| A5 (148 x 210 mm) | • | • | • | |
| A4 (210 x 297 mm) | • | • | • | • |
| A3 (297 x 420 mm) | • | • | • | |
| SP Folio (215 x 315 mm) | | | • | |
| Oficio (215 x 340 mm) | | | • | |
| B6 JIS (128 x 182 mm) | | | • | |
| B5 JIS (182 x 257 mm) | • | • | • | • |
| B4 JIS (257 x 364 mm) | • | • | • | |
| RA3 (305 x 430 mm) | | | • | |
| SRA3 (320 x 450 mm) | | | • | |

a. Thin Cover/Index paper cannot be used in Trays 2-4.

### Table 1-10 Specialty Paper

| Paper Type and Size | Tray 1 | Trays 2- 4 | Multi-Purpose Tray | High-Capacity Feeder |
|---|---|---|---|---|
| Phaser 7700 Premium Transparency | • | | • | |
| Labels | | | • | |
| Paper Envelopes (all sizes) | | | • | |

### Table 1-11 Print Area

| Paper | Page Size | Image Area | Margin Top / Bottom | Sides |
|---|---|---|---|---|
| Statement | 5.5 x 8.5 in. | 5.1 x 8.1 in. | .2 in. | .2 in. |
| Executive | 7.25 x 10.5 in. | 6.85 x 10.1 in. | .2 in. | .2 in. |
| 8 x 10 in. | 8 x 10 in. | 7.6 x 9.6 in. | .2 in. | .2 in. |
| UK Foolscap | 8 x 13 in. | 7.6 x 12.6 in. | .2 in. | .2 in. |
| Letter | 8.5 x 11 in.<br>215.9 x 279.4 mm | 8.1 x 10.6 in.<br>205.9 x 269.4 m m | .2 in.<br>5 mm | .2 in.<br>5 mm |
| US Folio | 8.5 x 13 in. | 8.1 x 12.6 in. | .2 in. | .2 in. |
| Legal | 8.5 x 14 in.<br>216 x 356 mm | 8.1 x 13.6 in. | .2 in. | .2 in. |
| Tabloid | 11 x 17 in.<br>279 x 432 mm | 10.4 x 16.4 in.<br>269 x 432 mm | .2 in.<br>5 mm | .2 in.<br>5 mm |
| Tabloid Extra | 12 x 18 in. | 11.6 x 17.6 in. | .2 in. | .2 in. |
| A6 | 105 x 148 mm | 95 x138 mm | 5 mm | 5 mm |
| A5 | 148 x 210 mm<br>5.83 x 8.27 in. | 138 x 200 mm<br>5.43 x 7.87 in. | 5 mm<br>.2 in. | 5 mm<br>.2 in. |
| A4 | 210 x 297 mm<br>8.3 x 11.7 in. | 200 x 287 mm<br>7.9 x 11.3 in. | 5 mm<br>.2 in. | 5 mm<br>.2 in. |
| A3 | 297 x 420 mm<br>11.7 x 16.5 in. | 287 x 410 mm<br>11.3 x 16.1 in. | 5 mm<br>.2 in. | 5 mm<br>.2 in. |
| SP Folio | 215 x 315 mm | 205 x 305 mm | 5 mm | 5 mm |
| Oficio | 215 x 340 mm | 205 x 330 mm | 5 mm | 5 mm |
| B6 JIS | 128 x 182 mm | 118 x 172 mm | 5 mm | 5 mm |
| B5 JIS | 182 x 257 mm | 172 x 247 mm | 5 mm | 5 mm |
| B4 JIS | 257 x 364 mm | 247 x 354 mm | 5 mm | 5 mm |

**Table 1-11 Print Area (cont'd.)**

| Paper | Page Size | Image Area | Margin Top / Bottom | Sides |
|---|---|---|---|---|
| RA3 | 305 x 430 mm | 297 x 420 mm | 5 mm | 4 mm |
| SRA3[a] | 320 x 450 mm | 303 x 432 mm | 9 mm | 8.5 mm |
| Official #10 Envelope | 4.13 x 9.5 in.<br>105 x 241 mm | 3.73 x 9.1 in.<br>95 x 231 mm | .2 in.<br>5 mm | .2 in.<br>5 mm |
| #9 1/2 Booklet | 9 x 12 in. | 8.6 x 11.6 in. | .2 in. | .2 in. |
| DL Envelope | 110 x 220 mm | 100 x 210 mm | 5 mm | 5 mm |
| B6 Envelope | 125 x 176 mm | 115 x 166 mm | 5 mm | 5 mm |
| B5 Envelope | 176 x 250 mm | 166 x 240 mm | 5 mm | 5 mm |
| B4 Envelope | 250 x 353 mm | 240 x 343 mm | 5 mm | 5 mm |
| C6 Envelope | 114 x 162 mm | 104 x 152 mm | 5 mm | 5 mm |
| C5 Envelope | 162 x 229 mm | 152 x 219 mm | 5 mm | 5 mm |
| C4 Envelope | 229 x 324 mm<br>9.02 x 12.8 in. | 219 x 314 mm | 5 mm<br>.2 in. | 5 mm<br>.2 in. |

a. SRA3 paper size and A3 full-bleed imageable area are supported through the Multi-Purpose Tray (MPT). print-quality outside the imageable area is not guaranteed.

# Diagnostics, Error Codes and Messages

## Error Messages

The Control Panel displays error codes when it encounters certain system failures or anomalies otherwise undetected by the user. These error codes are discussed in this section. When an error code first occurs, cycle the printer power On to see if the error recurs.

- For **Printer Performance problems**, see Troubleshooting on page 3-87.
- For **Print Image Quality problems**, see Print Image Quality Problems on page 3-108.

## Troubleshooting Error Codes

### Chain / Link

Definitions: A chain-link number is always represented as a pair, with the chain first and the link second.

Chain: A three digit identifier of a major attribute, counter or assembly.

Link: A three digit identifier of a specific component within the major attribute, counter or assembly.

### Where do they come from?

The chain-link encoding structure is used to identify or address a specific component within the printer. The chain points to a high level attribute or counter or component assembly, and the link points to a specific item in that assembly.

### Why are they here?

The printer uses chain-links to enumerate printer faults, and electronically address printer components or operations. Most fatal faults are identified by a number between 10 and 125, but a few faults are identified by the chain-link identifier.

## System Boot Sequence

1. The main power switch is turned On. The health LED turns On immediately.
2. The boot loader checks for RAM present and functional - if not, it posts a very large “RAM ERROR” on the Front Panel and blinks the LED 1/2 second On/Off continuously.
3. The boot Loader then runs POST diagnostics.
4. POST turns Off the health LED.
5. Post checks the Front Panel.
6. If keys have been pushed, the front panel displays “Processing Input.”
7. The front panel LED cycles; Green, Yellow, Red, Off.
8. The graphic panel turns On, the LED turns Green and the POST tests are run.

## Power On Self Test (POST)

The following tests are performed when the printer is powered On, after the boot loader runs and before the operating system is loaded and initialized.

Post diagnostics are intended to provide a quick means of isolating a defective subsystem associated with the Image processor board and SDRAM, POST Diagnostics Test Descriptions on page 2-34. POST returns control of the boot loader and the operating system is loaded. The operating system then loads the imaging processing software. If Post detected any soft errors a message is printed in a red box on the start page. If POST detects any hard errors both the front panel and health Led blink the error code pattern, see LED Blink Patterns on page 2-33.

## POST Faults

There are two kinds of faults: Soft and Hard.

A soft fault is any fault that is discovered by POST but does not prevent the operating system from initializing and becoming available as a tool for troubleshooting. These POST faults do not stop execution and are reported on the StartPage, in a red box, after the system is running.

A hard fault is any fault discovered by POST that prevents the operating system from initializing successfully. A hard fault prevents the system from further execution and is halted with blinking LEDs (front panel and health LED). The test name of the test that failed is displayed on the front panel.

**Note** With the DIP switches in service mode, a soft fault is converted to a hard fault.

## Fault Reporting Devices

There are four fault presentation devices. For hard faults:

- The health LED flashes according to the fault code.
- The front panel LED flashes in unison with the health LED.
- The last posted message to the graphic front panel is present.
- All soft faults are printed on the StartPage (when the DIP switches are in Customer Mode), see You can print a service Diagnostics menu map by highlighting “Print Service Menu Map”, using the arrow key and pressing OK. on page 2-35.

## LED Blink Patterns

For faults identified as hard faults, the POST firmware causes the PS health LED to blink in a particular pattern to identify the fault. There are short and long blinks. A long blink is worth 5 and a short blink is worth 1. If a fault blink pattern is flashed as long, long, short, short, this is fault code 5+5+1+1=12.

The exception to the above pattern is a RAM test error. The RAM tests have a special blink pattern and the front panel displays “RAM Error.”

During power up the front panel LED is On. If the RAM tests fail, the Image Processor Board health LED is turned Off, and the front panel LED is red. At 1/2-second intervals, the health LED and the front panel LED toggle continuously.

## POST Diagnostics Test Descriptions

### Table 2-1 POST Diagnostics Test Descriptions

| Test | Fault Code | Description |
|---|---|---|
| SDRAM | **1** | (Hard) This test fails, if the boot loader finds no RAM present or faulty RAM.<br>Boot loader posts the message “RAM error” to the front panel and blinks the front panel LED. |
| Front Panel | **2** | (Hard) Performed during the POST firmware initialization phase.<br>If the front panel is unplugged a hard fault is indicated by the heath LED. |
| I/O ASIC | **3** | (Hard) This test determines if the I/O chip is functioning properly. |
| Memory | **4** | (Hard) This test checks 64-bit reads and writes to memory. |
| EEPROM | **10** | (Hard) Addressing of the EEPROM part is tested. |
| Ethernet | **11** | (Hard) Checks the ethernet core. |
| CPU Interrupts | **12** | (Hard) This test checks that each interrupt source to the CPU is functioning. |
| USB | **13** | (Hard) Checks that the USB core is functioning properly. |
| Real Time Clock | **7** | (Soft) The real time clock is tested. |
| RAM DIMM Presence | **8** | (Soft) This test examines bad or incompatible RAM DIMMs. |
| RAM Limits | **9** | (Soft) Checks that there is at least 128 Mbytes installed and ignores more than 512 Mbytes. |
| IDE Disk | **12** | (Soft) Checks the disk controller core, and runs a DIAGNOSE command on the hard drive. |

**Note** If the fault code indicates 12, you must check the front panel to see if the test name is **“CPU Interrupts”** or **“IDE Disk”** before beginning troubleshooting.

# Service Diagnostics

Service diagnostics are to be executed by the service technician through the front panel. The DIP switches should be set to Service Mode while performing functions of the Service Diagnostics menu.

## Entering Service Diagnostics Mode

1. To enter Diagnostics mode the printer must be turned Off.
2. Hold down the **Back** and **Information** keys simultaneously and turn the printer back on.
3. Continue to hold the keys until the following message is displayed on the front panel: “Service Diagnostics V3.60, Initializing”, and then release.
4. Next, the front panel displays the Service Diagnostics Menu.

You can print a service Diagnostics menu map by highlighting “**Print Service Menu Map”,** using the arrow key and pressing **OK.**

### Dip Switches

Four DIP switches allow you to reset the printer or place the printer in different operating modes. You must set the switches before the printer is switched On to enter the selected mode.

**Note** When performing the Registration Control Procedures (Processes of the RegiCon Adjustment on page 4-127), you must set the switches to Service Mode (refer to Rear Panel on page 1-23). This avoids a problem with RegiCon when the customer has the PostScript startpage enabled.

**Note** The Service Menu functions are to be used only by Xerox service personnel and authorized service providers. The printer can be damaged by the improper use of the built-in service tests.

In all the service tests,

- The **Back** or **Cancel** button can be used to abort a test and return you to the menu from where the test began.
- The **OK** button either enters the next lower level menu or causes the highlighted test to execute.
- The **Up** and **Down** keys highlight test options or selection of an appropriate entry while executing a test. If there is a numeric value that must be entered these keys are used to adjust that value.
- The **Info** button is used to post information or define a mnemonic. Press the **Info** or **OK** button again to remove the text and restore the menu.

## Service Diagnostics Test Menu Functions

### Table 2-2 Service Diagnostics Test Menu Functions

| Test | Front Panel Display | Test Operation, Results and Function Definition |
|---|---|---|
| **Print Service Menu Map**<br>Prints the service diagnostics menu page | | |
| **General Status**<br>Provides current print engine status | | |
| Engine ROM Version | Engine Version is 3.60<br>Video ASIC Version: 1.15 | Prints Current engine status. |
| Configuration | 3TM or HCF, if present<br>+Duplexer +Finisher (if present) | Displays optional components.<br>3TM=LTD |
| Ambient Temp/Humidity | Temperature is XX° C<br>Humidity is XX% | Displays current temperatures. |
| Fuser Temperature | Front Temp is XXX° C<br>Back Temp is XXX° C | Displays current temperature. |
| Fault List | No Faults Detected<br><nn,nnn> *Fault Text* | Power up only - current static condition, not a history log. |
| Front Panel Adjust | Adjust Contrast?<br>Yes<br>No<br>Backlight On?<br>Yes<br>No | Adjust Value: 1 - 15: 8 Default<br>1. Highlight **Yes** and press **OK**.<br>1. Press **UP**/**Down** to Adjust.<br>2. Press **OK** to accept new value and exit. |
| Jam Info | No Static Jam Detected<br>or<br>Static Jam: *area name* | Location of Jam |
| **Built-In Test Prints**<br>Prints pre-defined images stored in the engine firmware for troubleshooting image quality problems. | | |
| Paper Path Options | For Print Laser Check only: Selects tray, count of/continuous sheets, simplex/duplex, offset, media type/weight, finisher, staple. | |
| | Source tray: Tray 1-4, MPT<br>Yes<br>No | Press Up/Down to change setting. |
| | Current # sheets is n<br>Select new # sheets?<br>Yes<br>No | 1. Press Up/Down to change the number.<br>2. Press Info to shift column. |
| | Simplex/Duplex:<br>Change Duplex setting?<br>Yes<br>No | Press Up/Down to change setting. |

## Table 2-2 Service Diagnostics Test Menu Functions (cont'd.)

| Test | Front Panel Display | Test Operation, Results and Function Definition |
|---|---|---|
| | Offset: None, Auto, Front, Rear<br>Set a new offset?<br>Yes<br>No | Press Up/Down to change setting. |
| | Media Type:<br>Set New Media Type?<br>Yes<br>No | Press Up/Down to change setting. |
| | Output Destination<br>Change Output Setting?<br>Yes<br>No | Press Up/Down to change setting.<br>**Note** This option is only available with an optional finisher installed. |
| | Stapling is:<br>Set new stapling options?<br>Yes<br>No | Press Up/Down to change setting<br>**Note** This option is only available with an optional finisher installed. |
| Print Laser Check | Fuser warming up<br>Laser Init<br>Startup \| Imaging \| Delivering \| Finishing<br>Laser Done | This is a quick test for all four laser colors, including developer and toner.<br>All four primaries are present on the page. The print should appear grey. |
| Print Halftones | HalfTones Init<br>Startup \| Imaging \| Delivering \| Finishing<br>HalfTones Done | Prints 6 pages of 100% solid fill for; Yellow, Magenta, Cyan, Black, Red and Green. |
| Print Grid 1-dot | Grid Init<br>Startup \| Imaging \| Delivering \| Finishing<br>Grid Done | This print displays the four primary color lines in a grid pattern. Registration Control Procedures on page 4-130 |
| Print Fast Scan 8 Tone | Scan Init<br>Startup \| Imaging \| Delivering \| Finishing<br>Scan Done | Prints four pages of eight tones for each primary color.<br>*Note: Use SEF to see all scans.* |
| **Sensor Tests**<br>The technician should test the functionality of each sensor by blocking the sensor and watching its state change on the front panel.<br>Note: Several jam sensors only change state if a jam has occurred. All doors (interlock switches) must remain closed or defeated to test for a changed state. To update the sensor status, open and close the Interlock. | | |
| Ambient Temp /Humidity | Temperature is XX$^{o}$ C<br>Humidity is XX% | |
| Fuser Temperature | Front Temp is XX$^{o}$ C<br>Back Temp is XX$^{o}$ C | |

**Table 2-2 Service Diagnostics Test Menu Functions (cont'd.)**

| Test | Front Panel Display | Test Operation, Results and Function Definition |
|---|---|---|
| Interlocks | Front (or Right) Door is L<br>(A) Left Upper Door L<br>(D) Duplex Cover is L<br>(B) Left Lower Door is L<br>(C) Optional Tray Left Cover L | H = Open<br>L = Closed |
| Jam Sensors | LH Low Cover Area is H<br>LH Cover Area is H<br>LH Fuser Area is H<br>Duplex Cover Area is H<br>Tray Left Cover Area is H<br>Tray #1 Area is H<br>Tray #2 Area is H<br>Tray #3 Area is H<br>Tray #4 Area is H<br>Tandem Tray #3 Area is H<br>Tandem Tray #4 Area is H<br>MPT Tray Area is H<br>(F) Fin Compiler Cover Area H<br>(G) Fin Compiler Safety Area H<br>(H,J) Fin Front Cover Area is H<br>Fin Hor Tran Area is H<br>Fin Docking Area is H | H = Paper present<br>L = Paper not present<br><br><br><br>Engineering use only<br>Engineering use only<br>Engineering use only<br>Engineering use only<br>Engineering use only<br>Engineering use only<br>Engineering use only<br>This is the FIN IN GATE.<br>This is the FIN HOR.TRANS<br>This is the FIN EJECT<br>Engineering use only<br>Engineering use only |
| POB Sensor | POB Sensor is L | Paper on Belt Sensor<br>L = Paper present<br>H = Paper not present |
| Registration Sensor | Registration Sensor is H | L = Paper present<br>H = Paper not present |
| OHP Sensor | Left OHP is L<br>Right OHP is L | Overhead Projection Sensor<br>L = Paper or OHP present<br>H = Paper or OHP Band not present |
| Duplex Sensor | Duplex is L | H = Paper present<br>L = Paper not present |
| Tray Feed Sensors | Feed Out #1 is L<br>Take Away (F/O #2) is L<br>Feed Out #3 is L<br>Feed Out #4 is L | H = Paper present<br>L = Paper not present |
| Stack Full Sensor | Stack Full is H | H =Output Stack not full<br>L = Output Stack full |
| Fuser Exit Sensor | Fuser Exit is L | H = Paper present<br>L = Paper not present |
| 2nd BTR Retract Sensor | 2nd BTR Retract is L | H = In contact<br>L = Retracted |
| Fuser Present | Fuser is Present<br>Change soon \| Change | Need to cycle power to get the results to change when installing a new fuser. |

**Table 2-2 Service Diagnostics Test Menu Functions (cont'd.)**

| Test | Front Panel Display | Test Operation, Results and Function Definition |
|---|---|---|
| Read Fuser Fuses | Fuse 1 is Open<br>Fuse 2 is Open<br>Fuse 3 is Shorted | 50 page fuse<br>90 day fuse<br>Mis-Use fuse<br>Open indicates Fuse is blown. |
| Accum MOB Sensor | MOB sensor is L | Accumulator Mark-On-Belt<br>Engineering use only |
| Belt Edge Sensor | Edge is nnn (current value) | Approximately 500 (+/- 25)<br>Engineering use only |
| BTR Sensors | BTR Y is L<br>BTR M is L<br>BTR C is L<br>BTR K is L<br>2nd BTR is L | H = Error<br>L = No error |
| ADC Sensors | ADC is H | ADC = Automatic Density Correction<br>Engineering use only.<br>Go to ADC Output check under adjustments and calibration. |
| Toner Waste Cartridge | Waste Cartridge presence is H<br><br>Waste Cartridge full is H | All door switches must be closed.<br>H = Present or full<br>L = Not present or not full |
| Tray Sensors | Tray 1<br>Do you want auto media lift?<br>Yes<br>No<br>Tray 1: SW1-4:HHHL-<Letter><br>Level: H<br>NoPaper: L<br>Tray 2 - <same as tray 1><br>Tray 3 - <no data available if HCF is installed><br>Tray 4 - <same as tray 3> | <br><br><br><br>The four switch pattern indicates the media size.<br>L = Tray not lifted<br>H = Tray lifted<br>H = Paper not present<br>L = Paper present<br>Note: Level 6 entries for Trays 2-4 follow the same pattern as for Tray 1. |
| MPT Sensors | MPT No Paper is L - engineering use only<br>MPT size is XXX | MPT = Multi-Purpose Tray<br>Range (0 - 1000)<br>i.e. Letter LEF approx. 180<br>i.e. Letter SEF approx. 460 |
| HCF Sensors | No HCF Attached<br>or<br>HCF Path 1 is L<br>HCF Path 2 is\| L | High-Capacity Feeder<br>Engineering use only |
| ATC Sensor | ATC 1 is nnn<br>ATC 2 is nnn<br>ATC 3 is nnn<br>ATC 4 is nnn | ATC = Automatic Toner Calibration<br>Value range (0 - 1000)<br><br>Engineering use only |

**Table 2-2 Service Diagnostics Test Menu Functions (cont'd.)**

| Test | Front Panel Display | Test Operation, Results and Function Definition |
|---|---|---|
| Print Cartridge Sensors | Print Cart. Yellow is H<br>Print Cart. Magenta is H<br>Print Cart. Cyan is H<br>Print Cart. Black is H | H = Cartridge present<br>L = No cartridge present<br><br>Engineering use only |
| Finisher Sensors | Interlocks<br>Left-Hand Cover is L<br>Top Cover is L<br>Docking is H<br>Horiz. Transport is L<br>Horizontal Transport<br>Entry is L<br>Exit is L<br>IOT Full is H<br>Compiler<br>Tray Exit is L<br>Paper is L<br>Cover Safety Switch is L<br>Stacker<br>No Paper is L<br>Height is H<br>Upper Limit is L<br>Stack A is L<br>Stack B is L<br>Tamper<br>Rear Home is L<br>Front Home is H<br>Stapler<br>Head Home is L<br>Low is L<br>Ready is L<br>Move is L<br>Front Corner is H<br>Miscellaneous<br>IOT Reg. Clutch is H<br>Eject Home is L<br>Set Clamp Home is L<br>Decurler Cam Position L | Optional - only if Finisher is installed<br>H = Open, actuated or paper present<br><br>L = Closed, deactuated or no paper present<br><br><br><br><br><br><br>Engineering use only<br><br>Engineering use only<br><br><br><br><br><br><br><br><br><br><br><br><br>Engineering use only<br><br><br>Engineering use only |
| **Motors/Fans Tests**<br>Tests the operation of motors by running one or more motor tests at a time. | | |
| Main Motor | Main Motor is On<br>Turn Motor Off<br>All Motors Off | This test produces gear hopping noise unless you perform the 2nd BTR retract motor test. |

## Table 2-2 Service Diagnostics Test Menu Functions (cont'd.)

| Test | Front Panel Display | Test Operation, Results and Function Definition |
|---|---|---|
| Steering Motor | To avoid damaging the Accumulator Belt, remove!<br>Do you wish to continue?<br>Yes<br>No<br>Motor On<br>Motor Off<br><br>Please cycle power to the printer now! | Caution: To avoid damaging the Accumulator Belt, it is recommended that you leave the belt installed and perform the Belt Edge Learn test instead, Step 1: Belt Edge Learn on page 4-134<br>Bypass the right-hand door interlock switch and observe the steering motor as the test is performed. |
| Print Cartridge Motor | To avoid damaging the Accumulator Belt, remove!<br>Do you wish to continue?<br>Yes<br>No<br>Motor On<br>Motor Off<br><br>Please cycle power to printer now! | **Caution** Only run this test once per power cycle to avoid excessive toner forced inside the developer and destroying it. |
| Accum Belt Motor | To avoid damaging the Accumulator Belt, remove!<br>Do you wish to continue?<br>Yes<br>No<br>Motor On<br>Motor Off<br><br>Please cycle power to printer now! | **Caution** To avoid damaging the Accumulator Belt, it is recommended that you leave the belt installed and perform the Belt Edge Learn test instead, Step 1: Belt Edge Learn on page 4-134 |
| 2nd BTR Motor | 2nd BTR Motor is Retract<br>This test toggles between the two values of Retract and Contact.<br>Motor Off | **Note** This test needs to be run twice to return the motor to a retracted position. |
| Duplex Motor | Duplex motor is On<br>Turn Motor On (Low Speed)<br>Turn Motor On (High Speed)<br>All Motors Off | Press Up/Down to change setting. |
| Paper Feed Motors | Feed Motor: 1<br>2<br>3<br>4 | Running this test causes a static jam. Clear paper path after running this test. |
| Paper Lift Motors | Lift Motor: 1<br>2<br>3<br>4 | Press Up/Down to change setting. |

**Table 2-2 Service Diagnostics Test Menu Functions (cont'd.)**

| Test | Front Panel Display | Test Operation, Results and Function Definition |
|---|---|---|
| Offset Motor | Direction: Forward<br>Backward | Press Up/Down to change setting. |
| Developer Motor | Developer Motor is On<br>Turn Motor Off<br>All Motors Off | CMY only |
| Dispenser Motors | Disp. Motor: Yellow<br>Magenta<br>Cyan<br>Black | **Caution** **Only run this test once** per power cycle to avoid excessive toner forced inside the developer and destroying it. |
| Agitator Motor | Motor On<br>Motor Off | Press OK to run test. |
| Fuser Fan | Fuser/Power Supply Fan is On<br>Turn Motor Off<br>All Motors Off | Press Up/Down to change setting. |
| Paper Path/No Pick | NoPaperRun Init | Runs a complete print cycle only no paper is picked and no toner is dispensed. |
| Finisher Motors | **Optional**<br>Miscellaneous<br>Main<br>Eject Forward<br>Eject Release<br>**Stacker**<br>Motor Up<br>Motor Down<br>**Tamper**<br>Rear Tamper Low Front<br>Rear Tamper Middle Front<br>Rear Tamper High Front<br>Rear Tamper Low Rear<br>Rear Tamper Middle Rear<br>Rear Tamper High Rear<br>Front Tamper Low Front<br>Front Tamper Middle Front<br>Front Tamper High Front<br>Front Tamper Low Rear<br>Front Tamper Middle Rear<br>Front Tamper High Rear<br>**Stapler**<br>Close<br>Reverse<br>Move Front<br>Move Rear | Press Up/Down to change setting. |

**Table 2-2 Service Diagnostics Test Menu Functions (cont'd.)**

| Test | Front Panel Display | Test Operation, Results and Function Definition |
|---|---|---|
| **Clutch Tests**<br>Tests functionality of clutches by activating one clutch at a time. | | |
| Take-Away Clutch | Clutch On<br>Clutch Off | All tests are activated by pressing OK.<br>Listen for the clutch.<br>Test times out after 1 second. |
| Developer Clutch | Clutch On<br>Clutch Off | |
| Registration Clutch | Clutch On<br>Clutch Off | |
| Duplex Clutch | Which Direction?<br>CCW<br>CW<br>Clutch On<br>Clutch Off | |
| MPT Feed Clutch | | |
| Finisher Clutches | Decurler Cam Clutch<br>Clutch On<br>Clutch Off | |
| **Solenoid Tests**<br>Tests functionality of the solenoids by activation one solenoid at a time. | | |
| Exit Gate Solenoid | Solenoid On<br>Solenoid Off | Engineering use only |
| Duplex Gate Solenoid | Solenoid On<br>Solenoid Off | Engineering use only |
| Shutter Solenoid | Solenoid On<br>Solenoid Off | Press OK to run test. |
| ADC Shutter Open | Solenoid On<br>Solenoid Off | ADC = Automatic Density Correction<br>Press OK to run test. |
| ADC Shutter Close | Solenoid On<br>Solenoid Off | ADC = Automatic Density Correction<br>Press OK to run test. |
| MPT Feed Solenoid | Solenoid On<br>Solenoid Off | MPT = Multi-Purpose Tray<br>Press OK to run test. |
| Finisher Solenoids | Set Clamp Paddle<br>HTrans Gate In Open<br>HTrans Gate In Close | Press OK to run test. |
| **Adjustments/ Calibrations**<br>Performs adjustments, calibrations and operations essential to the performance of the printer. For details on performing the RegiCon procedures, Registration Control Procedures on page 4-130 | | |
| Belt Edge Learn | | Refer to (Processes of the RegiCon Adjustment on page 4-127). |

**Table 2-2 Service Diagnostics Test Menu Functions (cont'd.)**

| Test | Front Panel Display | Test Operation, Results and Function Definition |
|---|---|---|
| RegiCon 685 Setup Cycle | | Refer to (Processes of the RegiCon Adjustment on page 4-127). |
| RegiCon Results Display | | Refer to Processes of the RegiCon Adjustment on page 4-127. |
| ATC Sensor Setup | | Refer to ATC Sensor Setup on page 4-142. |
| TRC Adjust | | Engineering use only |
| ADC Output Check | Measuring:<br>Result = 0<br>Stop Status = 0<br>ADC Sensor Fail = 0<br>ADC shutter Fail - 0 | This tests the Automatic Density Correction sensor. The highlighted line indicates test results. |
| Tone Up/Down | Measuring:<br>Result = 0 Status = 0<br>ATC Sensor Fail = None<br>ATC Limit Warn = None<br>ATC Change Warn = None | This tests the Automatic Toner Calibration sensor. The highlighted line indicates test results. |
| Laser Power Check | Y=OK M=OK C=OK K=OK<br>YMCK=OK<br>YMCK(CycUp)=OK | This tests the laser output. |
| PWM Mapping Data Read | | Engineering use only |
| Coarse RegiCon Init | | Refer to Coarse RegiCon Initialization on page 4-140). |
| **Maintenance**<br>Engine maintenance functions | | |
| Clean Fuser | Fuser Cleaning Sheets | Runs five clean sheets through the fuser. |
| Clean Accumulator Belt | *Note: To avoid damage to belt, disengage!*<br>Do you wish to continue?<br>Yes<br>No<br>Motor On<br>Motor Off<br>Please cycle power to the printer now! | **Caution**: To avoid damaging the Accumulator Belt, it is recommended that you leave the belt installed and perform the Belt Edge Learn test instead, Step 1: Belt Edge Learn on page 4-134 |
| Clean Tray 1 Rollers | | |
| Clean Tray 2 Rollers | | |
| Clean Tray 3 Rollers | | |
| Clean Tray 4 Rollers | | |
| Clean MPT Tray Rollers | | |

**Table 2-2 Service Diagnostics Test Menu Functions (cont'd.)**

| Test | Front Panel Display | Test Operation, Results and Function Definition |
|---|---|---|
| **NVRAM Access** | | |
| You can read or reset, selected NVRAM address locations. For all NVRAM access tests Service Diagnostics NVRAM Resets on page 6-149 | | |
| PostScript NVRAM Reset | | Refer to Service Diagnostics NVRAM Resets on page 6-149. |
| Clear Tech Rep Faults | Clear <4-346><br>Clear <9-380 ~ 9-383><br>Clear <9-654><br>Clear <9-910 ~ 913><br>Clear <10-348 & 10-350> | Error Code 30<br>Error Codes 12, 13, 14, & 15<br>Engineering Use Only<br>Engineering Use Only<br>Error Codes 40 and 44 |
| CRU Life Counters | | Engineering Use Only |
| Reset Engine NVRAM | **Writes data to Eng NVM from Hard Drive**<br>Are you sure?<br>Yes<br>No | Refer to Reset Engine NVRAM on page 6-150. |
| Store Engine NVRAM | **Writes data to Hard Drive from Eng NVM**<br>Are you sure?<br>Yes<br>No | Refer to Store Engine NVRAM on page 6-150. |
| **Exit** | Exits to PostScript without running POST. | |

# Error Codes and Messages Troubleshooting

Some Error Codes create “Tech Rep Faults” which must be cleared, see Clear Tech Rep Faults on page 6-149.

# Voltage Measurements

Many voltage measurements are required for expeditious troubleshooting. The following illustration is provided at this location for your convenience in locating most of the connectors/pins from which voltage measurements are taken. Cross references (links) are provided.

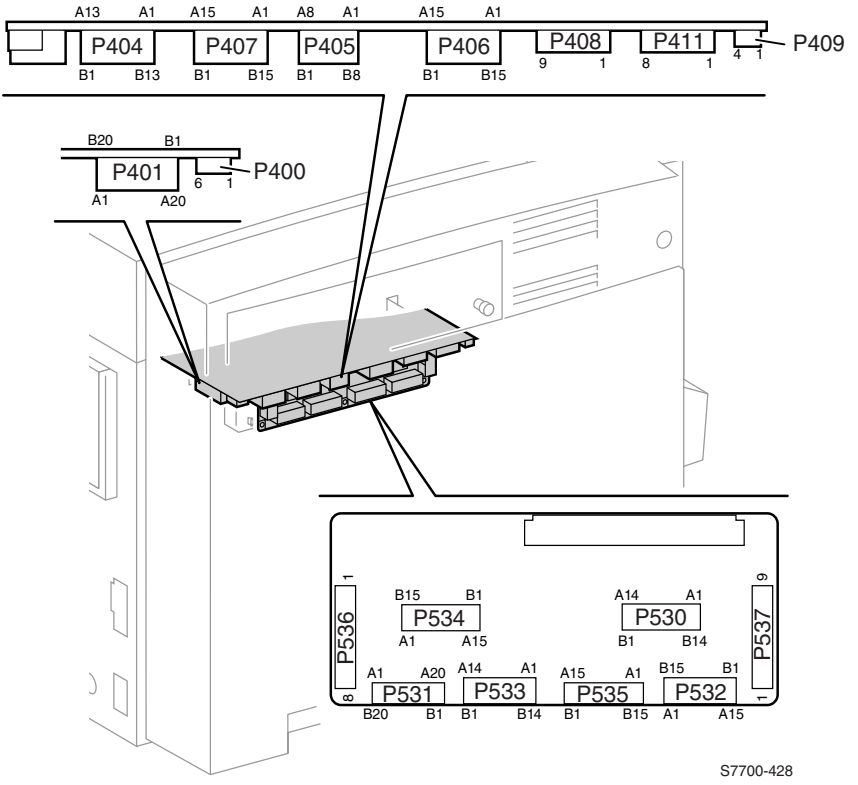


**Figure 2-1 Voltage Measurement Point Locations**

## Fuser Connector Pin Locations

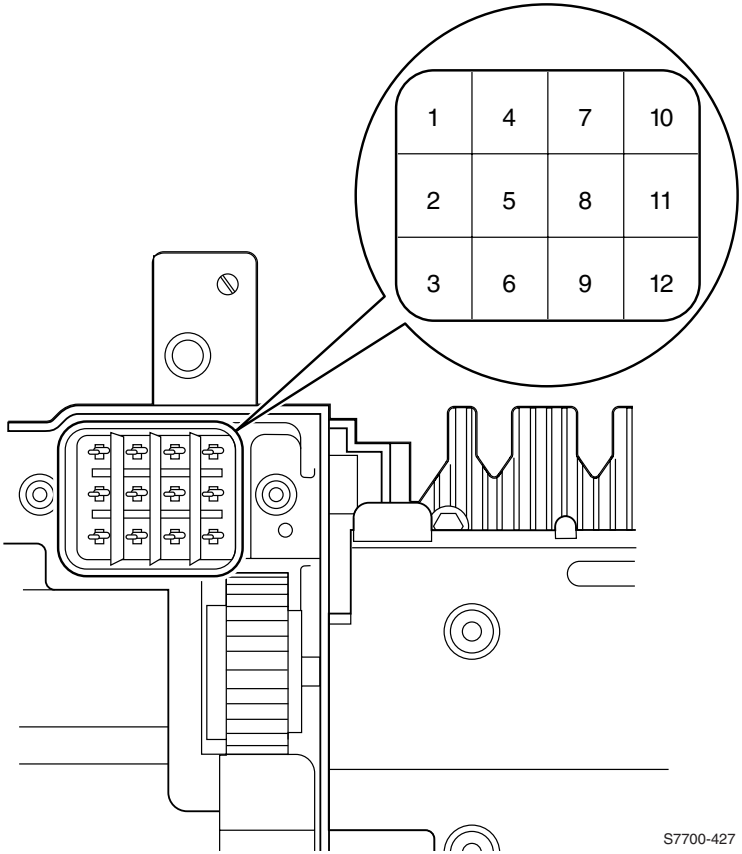


**Fig 2-2 Fuser Connector Pin Locations**

| Error Code | Chain / Link | Front Panel Message |
|---|---|---|
| **10** | **06-380**<br>**06-381**<br>**06-382**<br>**06-383**<br>**06-385** | **ERROR 10 LASER UNIT FAILURE** |

**Warning** Do not operate the Laser Unit outside the printer. The invisible light from the laser can cause permanent eye damage.

Remove Rear Cover (RRP 1, on page 7-154).
Disconnect P400 (see figure page 2-46) and P401 (see figure page 2-46) on the Engine Control Board.
Inspect both connectors to determine they are fully engaged as a unit. Re-engage, if necessary.

**Note** The two connectors can NOT properly seat into their socket(s) unless they are both engaged as a unit. Ensure there is no separation.

Carefully reinsert the plugs into their joint socket and FIRMLY seat them.
Replace the Laser Unit (RRP 38, on page 7-200).

**Note** Whenever the mounting screws for the Laser Unit have been loosened, it is necessary to recalibrate the unit by performing the RegiCon Adjustment Procedure beginning on page 4-124.

If the problem persists, replace the Engine Control Board (RRP 42, on page 7-206).

| | | |
|---|---|---|
| **11** | **06-372** | **ERROR 11 LASER UNIT POLYGON MOTOR FAILURE** |

**Note** If this failure reoccurs three times successively, an Engine NVRAM value is set preventing further printer use until the Clear Tech Rep Fault, Clear <09-380 ~ 09-383> is run.

Remove Rear Cover (RRP 1, on page 7-154).
Disconnect P400 (see figure page 2-46) and P401 (see figure page 2-46) on the Engine Control Board.
Inspect both connectors to determine they are fully engaged as a unit. Re-engage, if necessary.

**Note** The two connectors can NOT properly seat into their socket(s) unless they are both engaged as a unit. Ensure there is no separation.

Carefully reinsert the plugs into their joint socket and FIRMLY seat them.
Replace the Laser Unit (RRP 38, on page 7-200).

**Note** Whenever the mounting screws for the Laser Unit have been loosened, it is necessary to recalibrate the unit by performing the RegiCon Adjustment Procedure beginning on page 4-124.

If the problem persists, replace the Engine Control Board (RRP 42, on page 7-206).

| Error Code | Chain / Link | Front Panel Message |
|---|---|---|
| 12 | 09-380 | ERROR 12 YELLOW ATC SENSOR FAILURE |

**Note** If this failure reoccurs three times successively, an Engine NVRAM value is set preventing further printer use until the NVRAM Access / Clear Tech Rep Fault / Clear <09-380 ~ 09-383> is run.

**Note** If necessary, enter Service Diagnostics Mode and run the “Clear Tech Rep Fault” procedure on page 6-149.

Remove the Rear Cover (RRP 1, on page 7-154) and Rear Shield (RRP 9, on page 7-163).
Measure the voltage at P534-2 (see figure page 2-46) on the Engine Control Board.
Does the voltage measure between +1 VDC and +3 VDC?
Yes No
- Measure the voltage at P534-3 (see figure page 2-46) on the Engine Control Board.
- Does the voltage measure +5 VDC?
- Yes No
  - Replace the Engine Control Board.
- Remove the Rear Cover (RRP 1, on page 7-154) and Rear Shield (RRP 9, on page 7-163).
- Measure the voltage at P534-1 (see figure page 2-46) on the Engine Control Board.
- Does the voltage measure 0 VDC?
- Yes No
  - Replace the Engine Control Board (RRP 42, on page 7-206).
- Remove the Print Cartridge Plate Cover (RRP 24, on page 7-179).
- Inspect the wiring harness between the Engine Control Board and the Developer Housing Assembly.
- Is the wiring harness in good condition?
- Yes No
  - Repair or replace as necessary.
- Replace the Developer Housing Assembly (RRP 27, on page 7-185).

Replace the Engine Control Board (RRP 42, on page 7-206).

**Note** Run approximately 10 pages of solid fill full-page prints of this primary color to ensure this error is cleared.

| Error Code | Chain / Link | Front Panel Message |
|---|---|---|
| 13 | 09-381 | ERROR 13 MAGENTA ATC SENSOR FAILURE |

**Note** If this failure reoccurs three times successively, an Engine NVRAM value is set preventing further printer use until the NVRAM Access / Clear Tech Rep Fault / Clear <09-380 ~ 09-383> is run.

**Note** If necessary, enter Service Diagnostics Mode and run the “Clear Tech Rep Fault” procedure on page 6-149.

Remove the Rear Cover (RRP 1, on page 7-154) and Rear Shield (RRP 9, on page 7-163).
Measure the voltage at P534-5 (see figure page 2-46) on the Engine Control Board.
Does the voltage measure between +1 VDC and +3 VDC?
Yes No
- Measure the voltage at P534-6 (see figure page 2-46) on the Engine Control Board.
- Does the voltage measure +5 VDC?
- Yes No
  - Replace the Engine Control Board.
- Measure the voltage at P534-0 (see figure page 2-46) on the Engine Control Board.
- Does the voltage measure 0 VDC?
- Yes No
  - Replace the Engine Control Board (RRP 42, on page 7-206).
- Remove the Print Cartridge Plate Cover (RRP 24, on page 7-179).
- Inspect the wiring harness between the Engine Control Board and the Developer Housing Assembly.
- Is the wiring harness in good condition?
- Yes No
  - Repair or replace as necessary.
- Replace the Developer Housing Assembly (RRP 27, on page 7-185).

Replace the Engine Control Board (RRP 42, on page 7-206).

**Note** Run approximately 10 pages of solid fill full-page prints of this primary color to ensure this error is cleared.

| Error Code | Chain / Link | Front Panel Message |
|---|---|---|
| 14 | 09-382 | ERROR 14 CYAN ATC SENSOR FAILURE |

**Note** If this failure reoccurs three times successively, an Engine NVRAM value is set preventing further printer use until the NVRAM Access / Clear Tech Rep Fault / Clear <09-380 ~ 09-383> is run.

**Note** If necessary, enter Service Diagnostics Mode and run the “Clear Tech Rep Fault” procedure on page 6-149.

Remove the Rear Cover (RRP 1, on page 7-154) and Rear Shield (RRP 9, on page 7-163).
Measure the voltage at P534-8 (see figure page 2-46) on the Engine Control Board.
Does the voltage measure between +1 VDC and +3 VDC?
Yes No
- Measure the voltage at P534-9 (see figure page 2-46) on the Engine Control Board.
- Does the voltage measure +5 VDC?
- Yes No
  - Replace the Engine Control Board (RRP 42, on page 7-206).
- Measure the voltage at P534-7 (see figure page 2-46) on the Engine Control Board.
- Does the voltage measure 0 VDC?
- Yes No
  - Replace the Engine Control Board (RRP 42, on page 7-206).
- Remove the Print Cartridge Plate Cover (RRP 24, on page 7-179).
- Inspect the wiring harness between the Engine Control Board and the Developer Housing Assembly.
- Is the wiring harness in good condition?
- Yes No
  - Repair or replace as necessary.
- Replace the Developer Housing Assembly (RRP 27, on page 7-185).

Replace the Engine Control Board (RRP 42, on page 7-206).

**Note** Run approximately 10 pages of solid fill full-page prints of this primary color to ensure this error is cleared.

| Error Code | Chain / Link | Front Panel Message |
|---|---|---|
| 15 | 09-383 | ERROR 15 BLACK ATC SENSOR FAILURE |

**Note** If this failure reoccurs three times successively, an Engine NVRAM value is set preventing further printer use until the NVRAM Access / Clear Tech Rep Fault / Clear <09-380 ~ 09-383> is run.

**Note** If necessary, enter Service Diagnostics Mode and run the “Clear Tech Rep Fault” procedure on page 6-149.

Remove the Rear Cover (RRP 1, on page 7-154) and Rear Shield (RRP 9, on page 7-163).
Measure the voltage at P534-11 (see figure page 2-46) on the Engine Control Board.
Does the voltage measure between +1 VDC and +3 VDC?
Yes No
- Measure the voltage at P534-12 (see figure page 2-46) on the Engine Control Board.
- Does the voltage measure +5 VDC?
- Yes No
  - Replace the Engine Control Board (RRP 42, on page 7-206).
- Measure the voltage at P534-10 (see figure page 2-46) on the Engine Control Board.
- Does the voltage measure 0 VDC?
- Yes No
  - Replace the Engine Control Board (RRP 42, on page 7-206).
- Remove the Print Cartridge Plate Cover (RRP 24, on page 7-179).
- Inspect the wiring harness between the Engine Control Board and the Developer Housing Assembly.
- Is the wiring harness in good condition?
- Yes No
  - Repair or replace as necessary.
- Replace the Developer Housing Assembly (RRP 27, on page 7-185).

Replace the Engine Control Board (RRP 42, on page 7-206).

**Note** Run approximately 10 pages of solid fill full-page prints of this primary color to ensure this error is cleared.

| Error Code | Chain / Link | Front Panel Message |
|---|---|---|
| **20** | **09-342** | **ERROR 20 TRANSFER ROLLER CONTACT FAILURE** |

Enter Service Diagnostics Mode.
Perform the “2nd BTR Motor” test. Listen for a short run of the motor.
Did the motor run?
Yes No
- Remove the Left-Hand Rear Mid Cover (RRP 5, on page 7-158).
- Inspect the Left-Hand Cover Assembly wiring harness for damage and ensure all connectors are properly seated.
- If the problem persists, replace the Engine Control Board (RRP 42, on page 7-206).
- If the problem continues to persist, replace the entire Left-Hand Cover Assembly (RRP 6, on page 7-160).

Remove the Rear Cover (RRP 1, on page 7-154) and Rear Shield (RRP 9, on page 7-163).
Reconnect power and enter Service Diagnostics Mode.
Measure the voltage at the Engine Control Interface Board P532A-14 (see figure page 2-46).
Perform the “2nd BTR Motor” several times.
Does the voltage toggle between +5 VDC and 0 VDC when the test is run?
Yes No
- Replace the Transfer Roller Retract Sensor.

Replace the Engine Control Board (RRP 42, on page 7-206).

| | | |
|---|---|---|
| **21** | **09-343** | **ERROR 21 TRANSFER ROLLER RETRACT FAILURE** |

Enter Service Diagnostics Mode.
Perform the “2nd BTR Motor” test. Listen for a short run of the motor.
Did the motor run?
Yes No
- Remove the Left-Hand Rear Mid Cover(RRP 5, on page 7-158).
- Inspect the Left-Hand Cover Assembly wiring harness for damage and ensure all connectors are properly seated.
- If the problem persists, replace the Engine Control Board (RRP 42, on page 7-206).
- If the problem continues to persist, replace the entire Left-Hand Cover Assembly (RRP 6, on page 7-160).

Remove the Rear Cover (RRP 1, on page 7-154) and Rear Shield (RRP 9, on page 7-163).
Reconnect power and enter Service Diagnostics Mode.
Measure the voltage at the Engine Control Interface Board P532A-14 (see figure page 2-46).
Perform the “2nd BTR Motor” several times.
Does the voltage toggle between +5 VDC and 0 VDC when the test is run?
Yes No
- Replace the Transfer Roller Retract Sensor.

Replace the Engine Control Board (RRP 42, on page 7-206).

| Error Code | Chain / Link | Front Panel Message |
|---|---|---|
| 30 | 04-346 | ERROR 30 Accumulator Belt HOME POSITION TOOK TOO LONG. |

**Note** If this failure reoccurs three times successively, an Engine NVRAM value is set preventing further printer use until the NVRAM Access / Clear Tech Rep Fault / Clear <04-346> is run.

Ensure the Accumulator Belt shipping restraints have been removed.
Enter Service Diagnostics Mode, Service Diagnostics on page 2-35
Run the “Clear Tech Rep Fault” procedure on *page 6-149*.
Lower the Main Release Lever and return to the upright position to reestablish electrical connections to the belt.
Open the RH Door and defeat the interlock switch.
Look for rotation of the Accumulator Belt during the following test.
Enter Adjustments / Calibrations menu.
Run the “Belt Edge Learn” test.
Did the Accumulator Belt rotate?
Yes No

Remove the Accumulator Belt Assembly (RRP 35, on page 7-196).

**Caution** Removing the Accumulator Belt Assembly allows ambient light into the print cartridge area. Avoid exposing the print cartridge drums to light.

Manually rotate clockwise the drive gear of the Accumulator Belt Assembly.
Does it move freely?
Yes No

Inspect the Accumulator Belt Cleaner Waste Auger for packed toner.
Is the area inside the auger relatively clear of toner?
Yes No

**Note** **It is easy to spill toner in the next step.**

Remove the Waste Toner Cartridge.
Run the “Agitator Motor Test.”
Does the Waste Toner Agitator Motor rotate?
Yes No

Measure the voltage at the Engine Control Board J404B-3 (see figure page 2-46).
Does the voltage measure +24 VDC?
Yes No

Measure the voltage at the Engine Control Board J408-7 (see figure page 2-46).
Does the voltage measure +24 VDC?
Yes No

Check for +24 VDC at the supply Troubleshooting the +24 VDC LVPS on page 3-90

Replace the Engine Control Board (RRP 42, on page 7-206).

A B C D E

| Error Code | Chain / Link | Front Panel Message |
|---|---|---|
| 30 | 04-346 | ERROR 30 Accumulator Belt HOME POSITION TOOK TOO LONG (*Continued*) |

A B C D E

Repeat the “Agitator Motor” test while measuring the voltage at the Engine Control Board J404B-4 (see figure page 2-46) (RRP 42, on page 7-206).
Does the voltage measure 0 VDC when the test is run and +24 VDC when the test is not run?
Yes No
Replace the Engine Control Board (RRP 42, on page 7-206).
Replace the Waste Toner Agitator Motor (RRP 31, on page 7-190).

Using a Type II toner vacuum cleaner, vacuum out the Waste Auger Assembly.
Replace the Waste Toner Cartridge.
Recheck the gear that drives the Accumulator Belt for freedom of rotation.
Does it move freely now?
Yes No
Replace the Waste Auger Assembly (RRP 37, on page 7-199).
Reinstall all parts and assemblies and verify printer operation.
If problem persists, resume this procedure at next line below.

Remove the e-clip and remove any one of the Waste Auger Drive Gears.
Again, manually rotate the gear that drives the Accumulator Belt.
Does it move freely now?
Yes No
Replace the Accumulator Belt Drive Assembly (RRP 51, on page 7-217).
Replace the Waste Auger Assembly (RRP 37, on page 7-199).

Run the “Accumulator Belt Motor” test.
Does the Accumulator Belt Motor rotate?
Yes No
Inspect P530 (see figure page 2-46) on the Engine Control Interface Board for proper seating.
If the problem persists, replace the Accumulator Belt Drive Assembly (RRP 51, on page 7-217).
If the problem continues to persist, Replace the Engine Control Board (RRP 42, on page 7-206).

Replace the Accumulator Belt Assembly (RRP 51, on page 7-217).

Replace the Accumulator Belt Assembly (RRP 51, on page 7-217).

**Caution** If the Accumulator Belt is damaged, determine the cause of the damage before installing a new Accumulator Belt Assembly. Visually inspect the Accumulator Belt area inside the printer and inside the LH door for foreign object or damage parts. Inspect the belt steering mechanism to determine if it is operable. It may be necessary to query the user for additional information as to likely causes.

If the problem persists, replace the Engine Control Board (RRP 42, on page 7-206).

| Error Code | Chain / Link | Front Panel Message |
|---|---|---|
| 31 | 04-347 | ERROR 31 Accumulator Belt HOME POSITION FAILURE |

Lower the Main Release Lever and return to the upright position to reestablish electrical connections to the belt.
Open the RH Door and defeat the interlock switch.
Look for rotation of the Accumulator Belt during the following test.
Run the “Belt Edge Learn” test.
Did the Accumulator Belt rotate?
Yes No

Remove the Accumulator Belt Assembly (RRP 35, on page 7-196).

**Caution** Removing the Accumulator Belt Assembly allows ambient light into the print cartridge area. Avoid exposing the print cartridge drums to light.

Manually rotate the gear that drives the Accumulator Belt.
Does it move freely?
Yes No

Inspect the Accumulator Belt Cleaner Waste Auger for packed toner.
Is the area inside the auger relatively clear of toner?
Yes No

**Note** It is easy to spill toner in the next step.

Remove the Waste Toner Cartridge.
Run the “Agitator Motor Test.”
Does the Waste Toner Agitator Motor rotate?
Yes No

Measure the voltage at the Engine Control Board J404B-3 (see figure page 2-46).
Does the voltage measure +24 VDC?
Yes No

Measure the voltage at the Engine Control Board J408-7 (see figure page 2-46).
Does the voltage measure +24 VDC?
Yes No

Check for +24 VDC at the supply using the “Troubleshooting +24 VDC LVPS” procedure in the Troubleshooting Section, Troubleshooting the +24 VDC LVPS on page 3-90

Replace the Engine Control Board (RRP 42, on page 7-206).

Repeat the “Agitator Motor” test while measuring the voltage at the Engine Control Board J404B-4.
Does the voltage measure 0 VDC when the test is run and +24 VDC when the test is not run?
Yes No

Replace the Engine Control Board (RRP 42, on page 7-206).

Replace the Waste Toner Agitator Motor (RRP 31, on page 7-190).

A B C D

| Error Code | Chain / Link | Front Panel Message |
|---|---|---|
| **31** | 04-347 | **ERROR 31** ***Accumulator Belt HOME POSITION FAILURE (Continued)*** |

A B C D

Using a Type II toner vacuum cleaner, vacuum out the Waste Auger Assembly.
Replace the Waste Toner Cartridge.
Recheck the gear that drives the Accumulator Belt for freedom of rotation.
Does it move freely now?
Yes No
Replace the Waste Auger Assembly (RRP 37, on page 7-199).
Reinstall all parts and assemblies and verify printer operation.
If problem persists, resume this procedure at next line below.

Remove the e-clip and remove any one of the Waste Auger Drive Gears.
Again, manually rotate the gear that drives the Accumulator Belt.
Does it move freely now?
Yes No
Replace the Accumulator Belt Drive Assembly (RRP 51, on page 7-217).
Replace the Waste Auger Assembly (RRP 37, on page 7-199).

Run the “Accumulator Belt Motor” test.
Does the Accumulator Belt Motor rotate?
Yes No
Inspect P530 (see figure page 2-46) on the Engine Control Interface Board for proper seating.
If the problem persists, replace the Accumulator Belt Drive Assembly (RRP 51, on page 7-217).
If the problem continues to persist, Replace the Engine Control Board (RRP 42, on page 7-206).

Replace the Accumulator Belt Assembly (RRP 51, on page 7-217).

Replace the Accumulator Belt Assembly (RRP 51, on page 7-217).

**Caution** If the Accumulator Belt is damaged, determine the cause of the damage before installing a new Accumulator Belt Assembly. Visually inspect the Accumulator Belt area inside the printer and inside the LH door for foreign object or damage parts. It may be necessary to query the user for additional information as to likely causes.

If the problem persists, replace the Engine Control Board (RRP 42, on page 7-206).

| Error Code | Chain / Link | Front Panel Message |
|---|---|---|
| 32 | 04-348 | ERROR 32 UNEXPECTED Accumulator Belt EDGE SENSOR FAILURE |

Remove the Accumulator Belt Assembly (RRP 51, on page 7-217).
Inspect the connector for damage.
Is the connector in good condition?
Yes No
- Replace the Accumulator Belt Assembly (RRP 51, on page 7-217).
- Inspect the mating connector inside the printer for corresponding damage. Repair or replace the harness between the Accumulator Belt and connector J605 (see figure page 2-46).

Reinstall the Accumulator Belt Assembly.
Switch printer power ON.
Remove the Rear Cover (RRP 1, on page 7-154).
Remove the Rear Shield (RRP 9, on page 7-163).
Measure the voltage between the Engine Control Interface Board P533A-2(+) (see figure page 2-46) and frame ground.
Does the voltage measure between +1 VDC and 3 VDC?
Yes No
- Measure the voltage between the Engine Control Interface Board P533A-3(+) (see figure page 2-46) and frame ground.
- Does the voltage measure +5 VDC?
- Yes No
  - Replace the Engine Control Board (RRP 42, on page 7-206).
  - If the problem persists, replace the Engine Control Interface Board (RRP 43, on page 7-207).
- Measure the voltage between the Engine Control Interface Board P533A-1(+) (see figure page 2-46) and frame ground.
- Does the voltage measure 0 VDC?
- Yes No
  - Replace the Engine Control Board (RRP 42, on page 7-206).
  - If the problem persists, replace the Engine Control Interface Board (RRP 43, on page 7-207).
- Replace the Accumulator Belt Assembly (RRP 35, on page 7-196).
- If the problem persists, repair or replace the wiring harness between the Engine Interface Board and the Accumulator Belt Assembly.

If the problem persists, replace the Engine Control Board (RRP 42, on page 7-206).
If the problem persists, replace the Engine Control Interface Board (RRP 43, on page 7-207).

| Error Code | Chain / Link | Front Panel Message |
|---|---|---|
| 33 | 09-350 | ERROR 33 UNEXPECTED Accumulator Belt HOME SENSOR SIGNAL |

Remove the Accumulator Belt Assembly (RRP 35, on page 7-196).
Inspect the connector for damage.
Is the connector in good condition?
Yes No
- Replace the Accumulator Belt Assembly (RRP 35, on page 7-196).
- Inspect the mating connector inside the printer for corresponding damage. Repair or replace the harness between the Accumulator Belt and connector J605.

Reinstall the Accumulator Belt Assembly.
Switch printer power ON.
Remove the Rear Cover (RRP 1, on page 7-154).
Remove the Rear Shield (RRP 9, on page 7-163).
Measure the voltage between the Engine Control Interface Board P533A-6(+) (see figure page 2-46) and frame ground.
Does the voltage measure between +1 VDC and 3 VDC?
Yes No
- Measure the voltage between the Engine Control Interface Board P533A-7(+) (see figure page 2-46) and frame ground.
- Does the voltage measure +5 VDC?
- Yes No
  - Replace the Engine Control Board (RRP 42, on page 7-206).
  - If the problem persists, replace the Engine Control Interface Board (RRP 43, on page 7-207).
- Measure the voltage between the Engine Control Interface Board P533A-5(+) (see figure page 2-46)and frame ground.
- Does the voltage measure 0 VDC?
- Yes No
  - Replace the Engine Control Board (RRP 42, on page 7-206).
  - If the problem persists, replace the Engine Control Interface Board (RRP 43, on page 7-207).
- Replace the Accumulator Belt Assembly (RRP 35, on page 7-196).
- If the problem persists, repair or replace the wiring harness between the Engine Interface Board and the Accumulator Belt Assembly.

If the problem persists, replace the Engine Control Board (RRP 42, on page 7-206).
If the problem persists, replace the Engine Control Interface Board (RRP 43, on page 7-207).

| 34 | 09-351 | ERROR 34 Accumulator Belt DRIVE LOGIC FAILURE |
|---|---|---|

Replace the Accumulator Belt Drive Assembly (RRP 35, on page 7-196).
If the problem persists, replace the Engine Control Board (RRP 42, on page 7-206)

| Error Code | Chain / Link | Front Panel Message |
|---|---|---|
| 40 | 10-348 | ERROR 40 FUSER MAIN LAMP FAILURE |

**Note** If this failure reoccurs three times successively, an Engine NVRAM value is set preventing further printer use until the Clear Tech Rep Fault, Clear <10-348 & 10-350> is run.

Switch printer power OFF.
Remove the Fuser Assembly.

**Warning** Fuser may be very hot. Use extreme caution to prevent burns.

Measure the resistance between the Fuser Assembly connector P600-4 (see figure page 2-47) and P600-6 (see figure page 2-47).
Does the resistance measure between 20K and 100K ohms?
Yes No
| Replace the Fuser Assembly.
Reinstall Fuser.
Remove the Rear Cover (RRP 1, on page 7-154), Rear Shield (RRP 9, on page 7-163) and the Rear Shield Bracket
(RRP 10, on page 7-164).
Measure the resistance between P404A-1 (see figure page 2-46) and P404A-2 (see figure page 2-46) on the Engine Control Board.
Does the resistance measure between 20K and 100K ohms?
Yes No
| Repair or replace the wiring harness between the Engine Control Board and the Fuser.
Replace the Engine Control Board (RRP 42, on page 7-206).

| 41 | 10-349 | ERROR 41 FUSER STS (FRONT) FAILURE |
|---|---|---|

**Warning** Fuser may be very hot. Use extreme caution to prevent burns.

Measure the resistance between the Fuser Assembly connector P600-4 (see figure page 2-47) and P600-6 (see figure page 2-47).
Does the resistance measure between 20K and 100K ohms?
Yes No
| Replace the Fuser Assembly.
Reinstall Fuser.
Remove the Rear Cover(RRP 1, on page 7-154), Rear Shield (RRP 9, on page 7-163) and the Rear Shield Bracket (RRP 10, on page 7-164).
Measure the resistance between P404A-1 (see figure page 2-46) and P404A-2 (see figure page 2-46) on the Engine Control Board.
Does the resistance measure between 20K and 100K ohms?
Yes No
| Repair or replace the wiring harness between the Engine Control Board and the Fuser.
Replace the Engine Control Board (RRP 42, on page 7-206).

| Error Code | Chain / Link | Front Panel Message |
|---|---|---|
| 42 | 10-352 | ERROR 42 FUSER STS (FRONT) WARM TIME FAILURE |

Switch printer power OFF.
Remove the Fuser Assembly.

**Warning** Fuser may be very hot. Use extreme caution to prevent burns.

Measure the resistance between the Fuser Assembly connector P600-1 (see figure page 2-47) and P600-3 (see figure page 2-47).
Does the resistance measure approximately 6 ohms for a 110 VAC Fuser or approximately 20 ohms for a 220 VAC Fuser?
Yes No
| Replace the Fuser Assembly.
Measure the resistance between the Fuser Assembly connector P600-4 (see figure page 2-47) and P600-6 (see figure page 2-47).
Does the resistance measure between 20K and 100K ohms?
Yes No
| Replace the Fuser Assembly.
Reinstall Fuser.
Remove the Rear Cover (RRP 1, on page 7-154), Rear Shield (RRP 9, on page 7-163) and the Rear Shield Bracket (RRP 10, on page 7-164).
Measure the resistance between P404A-1 (see figure page 2-46) and P404A-2 (see figure page 2-46) on the Engine Control Board.
Does the resistance measure between 20K and 100K ohms?
Yes No
| Repair or replace the wiring harness between the Engine Control Board and the Fuser.
Reinstall the Fuser.
Switch printer power ON.
Does the Fuser get warm?
Yes No
| Replace the Chassis AC Power Assembly (RRP 49, on page 7-214).
Replace the Engine Control Board (RRP 42, on page 7-206).

| Error Code | Chain / Link | Front Panel Message |
|---|---|---|
| 43 | 10-353 | ERROR 43 FUSER SSR1 ON TIME FAILURE |

Switch printer power OFF.
Remove the Fuser Assembly.

**Warning** Fuser may be very hot. Use extreme caution to prevent burns.

Measure the resistance between the Fuser Assembly connector P600-1 (see figure page 2-47) and P600-3 (see figure page 2-47).
Does the resistance measure approximately 6 ohms for a 110 VAC Fuser or approximately 20 ohms for a 220 VAC Fuser?
Yes No
| Replace the Fuser Assembly.
Measure the resistance between the Fuser Assembly connector P600-4 (see figure page 2-47) and P600-6 (see figure page 2-47).
Does the resistance measure between 20K and 100K ohms?
Yes No
| Replace the Fuser Assembly.
Reinstall Fuser.
Remove the Rear Cover (RRP 1, on page 7-154), Rear Shield (RRP 9, on page 7-163) and the Rear Shield Bracket (RRP 10, on page 7-164).
Measure the resistance between P404A-1 (see figure page 2-46) and P404A-2 (see figure page 2-46) on the Engine Control Board.
Does the resistance measure between 20K and 100K ohms?
Yes No
| Repair or replace the wiring harness between the Engine Control Board and the Fuser.
Reinstall the Fuser.
Switch printer power ON.
Does the Fuser get warm?
Yes No
| Replace the Chassis AC Power Assembly(RRP 49, on page 7-214).
Replace the Engine Control Board (RRP 42, on page 7-206).

| Error Code | Chain / Link | Front Panel Message |
|---|---|---|
| 44 | 10-350 | ERROR 44 FUSER SUB LAMP FAILURE |

**Note** If this failure reoccurs three times successively, an Engine NVRAM value is set preventing further printer use until the Clear Tech Rep Fault, Clear <09-380 ~ 09-383> is run.

Switch printer power OFF.
Remove the Fuser Assembly.

**Warning** Fuser may be very hot. Use extreme caution to prevent burns.

Measure the resistance between the Fuser Assembly connector P600-7 (see figure page 2-47) and P600-9 (see figure page 2-47).
Does the resistance measure between 20K and 100K ohms?
Yes No
| Replace the Fuser Assembly.
Reinstall Fuser.
Remove the Rear Cover (RRP 1, on page 7-154), Rear Shield (RRP 9, on page 7-163) and the Rear Shield Bracket (RRP 10, on page 7-164).
Measure the resistance between P404A-3 (see figure page 2-46) and P404A-4 (see figure page 2-46) on the Engine Control Board.
Does the resistance measure between 20K and 100K ohms?
Yes No
| Repair or replace the wiring harness between the Engine Control Board and the Fuser.
Replace the Engine Control Board (RRP 42, on page 7-206).

| 45 | 10-351 | ERROR 45 FUSER STS (REAR) FAILURE |
|---|---|---|

Switch printer power OFF.
Remove the Fuser Assembly.

**Warning** Fuser may be very hot. Use extreme caution to prevent burns.

Measure the resistance between the Fuser Assembly connector P600- (see figure page 2-47)7 and P600-9 (see figure page 2-47).
Does the resistance measure between 20K and 100K ohms?
Yes No
| Replace the Fuser Assembly.
Reinstall Fuser.
Remove the Rear Cover (RRP 1, on page 7-154), Rear Shield (RRP 9, on page 7-163) and the Rear Shield Bracket (RRP 10, on page 7-164).
Measure the resistance between P404A-3 (see figure page 2-46) and P404A-4 (see figure page 2-46) on the Engine Control Board.
Does the resistance measure between 20K and 100K ohms?
Yes No
| Repair or replace the wiring harness between the Engine Control Board and the Fuser.
Replace the Engine Control Board (RRP 42, on page 7-206).

| Error Code | Chain / Link | Front Panel Message |
|---|---|---|
| 46 | 10-354 | ERROR 46 FUSER STS (REAR) WARM TIME FAILURE |

Switch printer power OFF.
Remove the Fuser Assembly.

**Warning** Fuser may be very hot. Use extreme caution to prevent burns.

Measure the resistance between the Fuser Assembly connector P600-1 and P600-3 (see figure page 2-47).
Does the resistance measure approximately 6 ohms for a 110 VAC Fuser or approximately 20 ohms for a 220 VAC Fuser?
Yes No
| Replace the Fuser Assembly.
Measure the resistance between the Fuser Assembly connector P600-7 (see figure page 2-47) and P600-9 (see figure page 2-47).
Does the resistance measure between 20 ohms and 100 ohms?
Yes No
| Replace the Fuser Assembly.
Reinstall Fuser.
Remove the Rear Cover (RRP 1, on page 7-154), Rear Shield (RRP 9, on page 7-163) and the Rear Shield Bracket (RRP 10, on page 7-164).
Measure the resistance between P404A-3 (see figure page 2-46) and P404A-4 (see figure page 2-46) on the Engine Control Board.
Does the resistance measure between 20K ohms and 100K ohms?
Yes No
| Repair or replace the wiring harness between the Engine Control Board and the Fuser.
Reinstall the Fuser.
Switch printer power ON.
Does the Fuser get warm?
Yes No
| Replace the Chassis AC Power Assembly (RRP 49, on page 7-214).
Replace the Engine Control Board (RRP 42, on page 7-206).

| Error Code | Chain / Link | Front Panel Message |
|---|---|---|
| 47 | 10-356 | ERROR 47 FUSER SSR2 ON TIME FAILURE |

Switch printer power OFF.
Remove the Fuser Assembly.

**Warning** Fuser may be very hot. Use extreme caution to prevent burns.

Measure the resistance between the Fuser Assembly connector P600-1 and P600-3 (see figure page 2-47).
Does the resistance measure approximately 6 ohms for a 110 VAC Fuser or approximately 20 ohms for a 220 VAC Fuser?
Yes No
| Replace the Fuser Assembly.
Measure the resistance between the Fuser Assembly connector P600-7 (see figure page 2-47) and P600-9 (see figure page 2-47).
Does the resistance measure between 20K and 100K ohms?
Yes No
| Replace the Fuser Assembly.
Reinstall Fuser.
Remove the Rear Cover (RRP 1, on page 7-154), Rear Shield (RRP 9, on page 7-163) and the Rear Shield Bracket (RRP 10, on page 7-164).
Measure the resistance between P404A-3 (see figure page 2-46) and P404A-4 (see figure page 2-46) on the Engine Control Board.
Does the resistance measure between 20K and 100K ohms?
Yes No
| Repair or replace the wiring harness between the Engine Control Board and the Fuser.
Reinstall the Fuser.
Switch printer power ON.
Does the Fuser get warm?
Yes No
| Replace the Chassis AC Power Assembly (RRP 49, on page 7-214).
Replace the Engine Control Board (RRP 42, on page 7-206).

| Error Code | Chain / Link | Front Panel Message |
|---|---|---|
| 54 | 10-398 | ERROR 54 FAN FAILURE |

Enter Service Diagnostics Mode.
Run the “Fuser Fan” test.
Does the Fuser Fan operate?
Yes No
- Remove the Rear Cover (RRP 1, on page 7-154), Rear Shield (RRP 9, on page 7-163) and the Rear Shield Bracket (RRP 11, on page 7-165).
- Measure the voltage between P530-1 (see figure page 2-46) on the Engine Control Board and frame ground.
- Does the voltage measure +24 VDC?
- Yes No
  - Replace the Engine Control Interface Board (RRP 43, on page 7-207).
- Measure the voltage between P530-4 (see figure page 2-46) on the Engine Control Board and frame ground.
- Does the voltage measure 0 VDC?
- Yes No
  - Replace the Engine Control Interface Board (RRP 43, on page 7-207).
- Measure the voltage between P530-3 (see figure page 2-46) on the Engine Control Board and frame ground.
- Does the voltage measure +5 VDC?
- Yes No
  - Replace the Engine Control Board (RRP 42, on page 7-206).
  - If the problem persists, repair or replace the harness between Engine Control Board and the Fuser Fan.
- Replace the Fuser Fan Assembly (RRP 34, on page 7-195).

Remove the Rear Cover (RRP 1, on page 7-154), Rear Shield (RRP 9, on page 7-163) and the Rear Shield Bracket (RRP 11, on page 7-165).
Measure the voltage between P530-5 (see figure page 2-46) on the Engine Control Board and frame ground.
Does the voltage measure +24 VDC?
Yes No
- Replace the Engine Control Interface Board (RRP 43, on page 7-207).

Measure the voltage between P530-8 (see figure page 2-46) on the Engine Control Board and frame ground.
Does the voltage measure 0 VDC?
Yes No
- Replace the Engine Control Interface Board (RRP 43, on page 7-207).

Measure the voltage between P530-7 (see figure page 2-46) on the Engine Control Board and frame ground.
Does the voltage measure +5 VDC?
Yes No
- Replace the Engine Control Board (RRP 43, on page 7-207).
- If the problem persists, repair or replace the harness between Engine Control Board and the +24 VDC LVPS Fan.

Replace the +24 VDC LVPS Fan (RRP 47, on page 7-212).

| Error Code | Chain / Link | Front Panel Message |
|---|---|---|
| 60 | 04-640 | ERROR 60 DRUM MOTOR FAILURE |

Enter Service Diagnostics Mode and run the “Print Cartridge Motor” test.
Does the motor run?
Yes No
- Remove the Rear Cover (RRP 1, on page 7-154), the Rear Cover Shield (RRP 9, on page 7-163) and the Rear Shield Bracket (RRP 10, on page 7-164).
- Connect the power cord and enter Service Diagnostics Mode.
- Measure the voltage at the Print Engine Controller Interface Board P407-4(+) (see figure page 2-46)and frame ground.
- Is the voltage +5 VDC?
- Yes No
  - Replace the Engine Control Board (RRP 42, on page 7-206).
- Measure the voltage at the Print Engine Controller Interface Board P407-6(+) (see figure page 2-46) and frame ground.
- Does the voltage measure +24 VDC?
- Yes No
  - Replace the Engine Control Board (RRP 42, on page 7-206).
- Measure the voltage at the Print Engine Controller Interface Board P407-1(+) (see figure page 2-46) and frame ground.
- Is the voltage +5 VDC?
- Yes No
  - Replace the Engine Control Board (RRP 42, on page 7-206).
- Run the “Print Cartridge Motor” test.
- Does the voltage still measure +5 VDC at P407-1?
- Yes No
  - Replace the Print Cartridge Drive Assembly (RRP 53, on page 7-219).
- Replace the Engine Control Board (RRP 42, on page 7-206).

Replace the Engine Control Board (RRP 43, on page 7-207).

| Error Code | Chain / Link | Front Panel Message |
|---|---|---|
| **70** | **09-360** | **ERROR 70 PRINT CARTRIDGE 1 COMMUNICATIONS** |
| **71** | **09-361** | **FAILURE** |
| **72** | **09-362** | **ERROR 70 PRINT CARTRIDGE 2 COMMUNICATIONS** |
| **73** | **09-363** | **FAILURE** |
| | | **ERROR 70 PRINT CARTRIDGE 3 COMMUNICATIONS FAILURE** |
| | | **ERROR 70 PRINT CARTRIDGE 4 COMMUNICATIONS FAILURE** |

Swap the suspect print cartridge with any other cartridge.
Close all doors.
Does the problem follow the suspect print cartridge?
Yes No
- Remove the cartridge in problem location and carefully inspect the connector damage.
  Is the connector damaged?
  Yes No
  - Measure the voltage between pin 4 of the suspect print cartridge connector and frame ground.
    Does the voltage measure +3.3 VDC?
    Yes No
    - Measure the voltage between each of P405A-4, -8 (see figure page 2-46), P405B-4, -8 (see figure page 2-46) and frame ground.
      Are all voltages +3.3 VDC?
      Yes No
      - Replace the Engine Control Board (RRP 42, on page 7-206).

      Replace the harness between the Engine Control Board and the suspect print cartridge connector.
    Replace the Engine Control Board (RRP 42, on page 7-206).
  Replace the Print Cartridge Plate Assembly (RRP 26, on page 7-182).

Replace the Print Cartridge.

| Error Code | Chain / Link | Front Panel Message |
|---|---|---|
| **78** | **09-358** | **ERROR 78 WASTE TONER CARTRIDGE FULL DETECTION SENSOR FAILURE** |

Remove the Waste Cartridge Sensor Holder without disconnecting the harnesses (RRP 23, on page 7-178).
Measure the voltage between the yellow wire to the Waste Cartridge Full Sensor and frame ground and alternately interrupt the Waste Cartridge Full Sensor.
Does the voltage toggle between +5 VDC and 0 VDC?
Yes No
- Measure the voltage between the gray wire to the Waste Cartridge Full Sensor and frame ground.
  Does the voltage measure +5 VDC?
  Yes No
  - Remove the Rear Cover (RRP 1, on page 7-154) and Rear Shield (RRP 9, on page 7-163).
    Measure the voltage at P406A-3 (see figure page 2-46) on the Engine Control Board.
    Does the voltage measure +5 VDC?
    Yes No
    - Replace the Engine Control Board (RRP 42, on page 7-206).

    Inspect the wiring harness between the Engine Board and the Waste Cartridge Full Sensor. Repair or replace the harness as necessary.
  Measure the voltage between the violet wire to the Waste Cartridge Full Sensor and frame ground.
  Does the voltage measure 0 VDC?
  Yes No
  - Inspect the wiring harness between the Engine Board and the Waste Cartridge Full Sensor. Repair or replace the harness as necessary.

  Replace the Waste Cartridge Full Sensor.

Remove the Rear Cover (RRP 1, on page 7-154) and Rear Shield (RRP 9, on page 7-163).
Measure the voltage at P406A-2 (Voltage Measurements on page 2-46) on the Engine Control Board.
Alternately interrupt the Waste Cartridge Full Sensor again.
Does the voltage toggle between +5 VDC and 0 VDC?
Yes No
- Inspect the wiring harness between the Engine Board and the Waste Cartridge Full Sensor. Repair or replace the harness as necessary.

Replace the Engine Control Board (RRP 42, on page 7-206).

| | | |
|---|---|---|
| **80** | **04-341**<br>**04-343** | **ERROR 80 ENGINE LOGIC BOARD FAILURE** |

Switch printer power Off, then On.
If the problem persists, replace the Engine Control Board (RRP 42, on page 7-206).

| Error Code | Chain / Link | Front Panel Message |
|---|---|---|
| **81** | **04-358** | **ERROR 81 CONTROLLER TO ENGINE COMMUNICATIONS FAILURE** |
| Switch printer power Off.<br>Remove the Image Processor Board, Image Processor Board Cover and the Image Processor Metal Cover and inspect the orange colored ribbon cable between the Relay Board and the Engine Control Board for proper connector seating.<br>If the problem persists, replace the Image Processor Board (RRP 39, on page 7-202).<br>If the problem continues to persist, replace the Electrical Chassis Assembly (RRP 41, on page 7-204).<br>If the problem continues, replace the Engine Control Board (RRP 42, on page 7-206). | | |
| **82** | **04-340**<br>**04-342** | **ERROR 82 ENGINE LOGIC BOARD RAM/ROM FAILURE** |
| 1. Turn printer power Off, then On.<br>2. If the problem persists, replace the Engine Controller Board (RRP 42, on page 7-206). | | |
| **83** | **04-362** | **ERROR 83 ENGINE LOGIC BOARD NVRAM FAILURE** |
| Replace the Engine Control Board (RRP 42, on page 7-206).<br>If the problem persists, replace the Image Processor Board (RRP 42, on page 7-206). | | |
| **84** | **04-371** | **ERROR 84 CONTROLLER TO ENGINE LOGIC BOARD TIME FAILURE** |
| Replace the Engine Control Board (RRP 42, on page 7-206).<br>If the problem persists, replace the Image Processor Board (RRP 42, on page 7-206). | | |
| **85** | **04-344** | **ERROR 85 ENGINE LOGIC BOARD MICRO PITCH FAILURE** |
| 1. Turn printer power Off, then On.<br>2. If the problem persists, replace the Engine Control Board (RRP 42, on page 7-206). | | |
| **86** | **04-345** | **ERROR 86 HIGH-VOLTAGE POWER SUPPLY FAILURE** |
| Replace the T3 High-voltage Power Supply (RRP 42, on page 7-206).<br>If problem persists, replace the Engine Control Board (RRP 42, on page 7-206). | | |
| **87** | **07-281**<br>**07-282**<br>**07-283**<br>**07-284**<br>**07-291**<br>**07-292**<br>**07-397** | **TRAY LIFT FAILURE** |

| Error Code | Chain / Link | Front Panel Message |
|---|---|---|

One at a time, pull out and reinsert each paper tray.
Listen for tray lift.
Is there an Auxiliary Feeder (Lower Tray Deck or a High-capacity Feeder) installed?
Yes No
| Refer to “Tray (1, 2, 3 or 4) Will Not Lift” section, page 3-95, in Troubleshooting.
Do any of the Auxiliary Feeder (LTD or HCF) Trays lift correctly?
Yes No
| Refer to “Auxiliary Feeder not recognized” section, page 3-96, in Troubleshooting.
Refer to “Tray (1, 2, 3 or 4) Will Not Lift” section, page 3-95, in Troubleshooting.

| Error Code | Chain / Link | Front Panel Message |
|---|---|---|
| 111<br>112 | 12-241<br>12-242 | FINISHER ERROR 111 STAPLER MOVE SENSOR ON FAILURE<br>FINISHER ERROR 112 STAPLER MOVE SENSOR OFF FAILURE |

Open the Finisher Front Door.
Defeat the Front Door Interlock Switch.
Enter Service Diagnostics Mode.
Run the Stapler “Move Front, Move Rear” and “Reverse” tests to verify the movement of the Stapler Carriage Assembly.
Does the Stapler Carriage Assembly move smoothly through its full range of travel?
Yes No
| Refer to the Finisher Troubleshooting Procedures to troubleshoot this problem.
Inspect the Stapler Move Sensor for damage and secure mounting.
Is the sensor in good condition and secure?
Yes No
| Repair or replace the sensor.
Remove the Finisher Rear Cover (RRP 42, on page 7-206) and the Board Cover (RRP 42, on page 7-206).
Measure the voltage between Finisher Board connector P852-7 (see figure page 2-46) and Finisher frame ground while interrupting the Move Sensor.
Does the voltage toggle between 0 VDC and +5 VDC?
Yes No
| Measure the voltage at Finisher Board connector P852-8 (see figure page 2-46).
| Does the voltage measure +5 VDC?
| Yes No
| | Replace the Finisher Control Board.
| Measure the voltage at Finisher Board connector P852-6 (see figure page 2-46).
| Does the voltage measure 0 VDC?
| Yes No
| | Replace the Finisher Control Board.
| Replace the Move Sensor.
Replace the Finisher Control Board.
If the problem persists, replace Printer Engine Control Board (RRP 42, on page 7-206).
If the problem continues to persist, verify the ground continuity between Finisher frame ground and Printer frame ground.

| Error Code | Chain / Link | Front Panel Message |
|---|---|---|
| 113 | 12-244 | FINISHER ERROR 113 STAPLER FAILURE |

Open the Finisher Front Door.
Verify the Stapler Carriage is its full home position.
Enter Service Diagnostics Mode.
Run the Stapler “Head Home” sensor test to verify home position.
Does the sensor indicate home position?
Yes No
- Remove the Finisher Rear Cover and the Board Cover (RRP 72, on page 11-330).
- Measure the voltage between Finisher Board connector P852-2 (see figure page 2-46) and Finisher frame ground while interrupting the Home Sensor.
- Does the voltage toggle between 0 VDC and +5 VDC?
  - Yes No
    - Measure the voltage between Finisher Board connector P852-1 (see figure page 2-46) and Finisher frame ground.
    - Does the voltage measure +5 VDC?
      - Yes No
        - Disconnect to the Stapler Unit Assembly.
        - Measure again the voltage between Finisher Board connector P852-1 (see figure page 2-46) and Finisher frame ground.
        - Does the voltage now measure +5 VDC?
          - Yes No
            - Replace the Finisher Control Board.
        - Replace the Stapler Unit Assembly.
      - Measure the voltage between Finisher Board connector P852-5 (see figure page 2-46) and Finisher frame ground.
      - Does the voltage measure 0 VDC?
        - Yes No
          - Test the wiring harness and the Finisher Control Board for continuity to Finisher frame ground.
          - Replace the Finisher Control Board.
        - Replace the Stapler Unit Assembly.
  - Replace the Finisher Control Board.

Perform the Stapler “Ready” sensor test.

| Error Code | Chain / Link | Front Panel Message |
|---|---|---|
| **113** | **12-244** | **FINISHER ERROR 113 STAPLER FAILURE (*Continued*)** |

Does the sensor indicate the Stapler is ready?
Yes No
- Remove the Finisher Front Cover (RRP 72, on page 11-330).
- Measure the voltage between Stapler Unit Assembly connector J886-3 (see figure page 2-46) and Finisher frame ground.
- Does the voltage measure 0 VDC?
  - Yes No
    - Replace the Stapler Unit Assembly.
  - Remove the Finisher Rear Cover and the Board Cover (RRP 72, on page 11-330).
  - Measure the voltage between Finisher Board connector P852-3 (see figure page 2-46) and Finisher frame ground.
  - Does the voltage measure 0 VDC?
    - Yes No
      - Repair or replace the wiring between the Stapler Unit Assembly and the Finisher Control Board.
    - Replace the Finisher Control Board.

Replace the Finisher Control Board.
If the problem persists, replace printer Engine Control Board (RRP 42, on page 7-206).
If the problem continues to persist, verify the ground continuity between Finisher frame ground and Printer frame ground.

| | | |
|---|---|---|
| 114 | 12-252 | FINISHER ERROR 114 FRONT TAMPER FAILURE |
| 115 | 12-253 | FINISHER ERROR 115 REAR TAMPER FAILURE |

Address this problem by investigating and replacing as necessary the following components/assemblies in order.
- Motor Assembly Tamper [PL10-15, item 2] for the appropriate motor per error code.
- Tamper Home Sensor [PL 10-15, item 4] for the appropriate sensor per error code.
- Finisher Controller Board (RRP 77, on page 11-336).
- Compiler Tray Assembly [PL 10-15, item 1].

| Error Code | Chain / Link | Front Panel Message |
|---|---|---|
| 116 | 12-254 | FINISHER ERROR 116 STACKER HEIGHT SENSOR OFF FAILURE |

Is the Finisher Stacker Tray installed?
Yes No
Install Finisher Stacker Tray.
Switch printer power Off, then On.
Inspect the Stack Height Sensor Actuator for proper installation or damage.
Is the Stack Height Sensor Actuator installed correctly and in good condition?
Yes No
Reinstall or replace the Stack Height Sensor Actuator.
Switch printer power OFF, then ON.
Enter Service Diagnostics Mode.
From the Main Menu, select “Stacker Tests/Finisher Sensors/Stacker.”
Remove the two screws holding the access door halves together.
Manually operate the Stacker Height Sensor by moving the actuator.
Does the display indicate the Stack Height Sensor toggling between H & L?
Yes No
Remove the Rear Cover and the Board Cover (RRP 72, on page 11-330).
Measure the voltage between the Finisher Control Board P850B-5 (see figure page 2-46) and Finisher frame ground.
Again manually actuate the Stack Height Sensor.
Does the voltage toggle between +5 VDC and 0 VDC?
Yes No
Measure the voltage at the Stack Height Sensor pin 2 (yellow) and Finisher frame ground.
Once again manually actuate the Stack Height Sensor.
Does the voltage toggle between +5 VDC and 0 VDC?
Yes No
Measure the voltage at Stack Height Sensor pin 1 (gray).
Does the voltage measure +5 VDC?
Yes No
Measure the voltage between the Finisher Control Board P850B-6 (see figure page 2-46) and Finisher frame ground.
Does the voltage measure +5 VDC?
Yes No
Replace the Finisher Control Board (RRP 77, on page 11-336).
Repair or replace the wiring harness between the Finisher Control Board and the Stack Height Sensor.

**Note** There is an intermediate connector in this harness (J870) behind the Front Cover. Remove Front Door to repair/replace the harness.

A B C D

| Error Code | Chain / Link | Front Panel Message |
|---|---|---|
| 116 | 12-254 | FINISHER ERROR 116 STACKER HEIGHT SENSOR OFF FAILURE (*Continued*) |

*A* *B* *C* *D*

Measure the voltage at the Stack Height Sensor pin 3 (violet) and Finisher frame ground.
Does the voltage measure 0 VDC?
Yes No

Measure the voltage between the Finisher Control Board P850B-4 (see figure page 2-46) and Finisher frame ground.
Does the voltage measure 0 VDC?
Yes No

Replace the Finisher Control Board (RRP 77, on page 11-336).

**Note** There is an intermediate connector in this harness (J870) behind the Front Cover. Remove Front Door to repair/replace the harness.

Repair or replace the wiring harness between the Finisher Control Board and the Stack Height Sensor

Replace the Stack Height Sensor (RRP 73, on page 11-332).

Repair or replace the wiring harness between the Finisher Control Board and the Stack Height Sensor.

**Note** There is an intermediate connector in this harness (J870) behind the Front Cover. Remove Front Door to repair/replace the harness.

Replace the Finisher Control Board (RRP 77, on page 11-336).

Replace the Finisher Control Board (RRP 77, on page 11-336).

| Error Code | Chain / Link | Front Panel Message |
|---|---|---|
| 117 | 12-255 | FINISHER ERROR 117 STACKER TRAY FAILURE |

Remove the Finisher Front Cover and Rear Cover (RRP 72, on page 11-330)].
Defeat the Front Cover Interlock.
Enter Service Diagnostics Mode.
From the Main Menu, “Motors/Fans Tests/Finisher Motors/Stacker.”
Run Motor Up and Down tests.
Does the Stacker Tray move up and down?
Yes No

Inspect the Stacker Motor Assembly and Belt Bracket Assembly for damage. Replace as necessary.
Does the Stacker move now?
Yes No

Replace the Finisher Control Board (RRP 77, on page 11-336).

Problem solved.

Drive the Stacker Tray to its highest position using the Motor Up test.
From the Main Menu, select “Sensor Tests/Finisher Sensors/Stacker.

| Error Code | Chain / Link | Front Panel Message |
|---|---|---|
| **117** | **12-255** | **FINISHER ERROR 117 STACKER TRAY FAILURE (*Continued*)** |

While watching the display, interrupt the Stack A and Stack B sensors.
Does the display indicate H & L for both sensors?
Yes No
- Does the display indicate H & L for one sensor?
  Yes No
  - Replace the Finisher Controller Board (RRP 77, on page 11-336).

  Address the following components/assemblies in order:
  - The unresponsive sensor.
  - The Finisher Control Board (RRP 77, on page 11-336).
  - The wiring harness between the sensors and the Finisher Control Board.

Replace the Engine Control Board (RRP 42, on page 7-206) in the printer.

| | | |
|---|---|---|
| **118** | **12-256** | **FINISHER ERROR 118 STAPLER FRONT CORNER SENSOR ON FAILURE** |
| **119** | **12-257** | **FINISHER ERROR 119 STAPLER FRONT CORNER SENSOR OFF FAILURE** |

Open the Front Door.
Defeat the Front Door Interlock.
Enter Service Diagnostics Mode.
From the “Motors/Fans Tests / Finisher Motors / Stapler Move Motor” test menu, select “Move Front” to move the Stapler to the front of the Finisher.
From the Main Menu, select “Sensor Tests/Finisher Sensors/Stacker.”
Manually move the Stapler Assembly so as to interrupt the Stapler Front Corner Sensor.
Does the Front Panel LCD show “Front Corner” toggling between H & L.
Yes No
- Remove the Rear Cover and the Board Cover (RRP 72, on page 11-330).
  Measure the voltage between the Finisher Control Board P850A-2 (see figure page 2-46) and Finisher frame ground.
  Again manually move the Stapler Assembly so as to interrupt the Stapler Front Corner Sensor.
  Does the voltage toggle between +5 VDC and 0 VDC?
  Yes No
  - Remove the Finisher Front Cover (RRP 72, on page 11-330).
    Measure the voltage at the Front Corner Sensor pin 2 (yellow) and Finisher frame ground.
    Once again manually move the Stapler Assembly so as to interrupt the Stapler Front Corner Sensor.

A B C

| Error Code | Chain / Link | Front Panel Message |
|---|---|---|
| **118** | **12-256** | **FINISHER ERROR 118 STAPLER FRONT CORNER SENSOR ON FAILURE (*Continued*)** |
| **119** | **12-257** | **FINISHER ERROR 119 STAPLER FRONT CORNER SENSOR OFF FAILURE (*Continued*)** |

A B C

Does the voltage toggle between +5 VDC and 0 VDC?

Yes No

Measure the voltage at Front Corner Sensor pin 1 (gray).

Does the voltage measure +5 VDC?

Yes No

Measure the voltage between the Finisher Control Board P850A-3 and Finisher frame ground.

Does the voltage measure +5 VDC?

Yes No

Replace the Finisher Control Board (RRP 77, on page 11-336).

Repair or replace the wiring harness between the Finisher Control Board and the Front Corner Sensor.

Measure the voltage at the Front Corner Sensor pin 3 (violet) and Finisher frame ground.

Does the voltage measure 0 VDC?

Yes No

Measure the voltage between the Finisher Control Board P850A-1 and Finisher frame ground.

Does the voltage measure 0 VDC?

Yes No

Replace the Finisher Control Board (RRP 77, on page 11-336).

Repair or replace the wiring harness between the Finisher Control Board and the Front Corner Sensor.

Replace the Front Corner Sensor.

Repair or replace the wiring harness between the Finisher Control Board and the Front Corner Sensor.

Replace the Finisher Control Board (RRP 77, on page 11-336).

Replace the Finisher Control Board (RRP 77, on page 11-336).

| Error Code | Chain / Link | Front Panel Message |
|---|---|---|
| 120 | 12-260 | FINISHER ERROR 120 EJECT CLAMP HOME SENSOR ON FAILURE |
| 121 | 12-262 | FINISHER ERROR 121 EJECT CLAMP HOME SENSOR OFF FAILURE |

Remove the Finisher Rear Cover (RRP 72, on page 11-330).
Remove the sensor from the top of the eject motor mount bracket (RRP 76, on page 11-335).
Enter Service Diagnostics Mode.
From the Main Menu, select “Sensor Tests/Finisher Sensors/Miscellaneous.”
Manually actuate the Eject Clamp Home Sensor and observe the display.
Does display indicate the Eject Clamp Home Sensor toggling between H & L?
Yes No

Remove the Rear Cover and the Board Cover (RRP 72, on page 11-330).
Measure the voltage between the Finisher Control Board P849-5 (see figure page 2-46) and Finisher frame ground.
Again manually actuate the Stack Height Sensor.
Does the voltage toggle between +5 VDC and 0 VDC?
Yes No

Measure the voltage at the Eject Clamp Home Sensor pin 2 (yellow) and Finisher frame ground.
Once again manually actuate the Eject Clamp Home Sensor.
Does the voltage toggle between +5 VDC and 0 VDC?
Yes No

Measure the voltage at Eject Clamp Home Sensor pin 1 (gray).
Does the voltage measure +5 VDC?
Yes No

Measure the voltage between the Finisher Control Board P849-6 (see figure page 2-46)and Finisher frame ground.
Does the voltage measure +5 VDC?
Yes No

Replace the Finisher Control Board (RRP 77, on page 11-336).

Repair or replace the wiring harness between the Finisher Control Board and the Eject Clamp Home Sensor.

A B C D

| Error Code | Chain / Link | Front Panel Message |
|---|---|---|
| **120** | **12-260** | **FINISHER ERROR 120 EJECT CLAMP HOME SENSOR ON FAILURE** |
| **121** | **12-262** | **FINISHER ERROR 121 EJECT CLAMP HOME SENSOR OFF FAILURE** |

A B C D

Measure the voltage at the Eject Clamp Home Sensor pin 3 (violet) and Finisher frame ground.
Does the voltage measure 0 VDC?
Yes No

Measure the voltage between the Finisher Control Board P849-4 (see figure page 2-46) and Finisher frame ground.
Does the voltage measure 0 VDC?
Yes No

Replace the Finisher Control Board (RRP 77, on page 11-336).

Repair or replace the wiring harness between the Finisher Control Board and the Eject Clamp Home Sensor.

Replace the Eject Clamp Home Sensor (RRP 76, on page 11-335).

Repair or replace the wiring harness between the Finisher Control Board and the Eject Clamp Home Sensor.

Replace the Finisher Control Board (RRP 77, on page 11-336).

Replace the Finisher Control Board (RRP 77, on page 11-336).

| Error Code | Chain / Link | Front Panel Message |
|---|---|---|
| 122 | 12-267 | FINISHER ERROR 122 DECURLER FAILURE |

Remove the Finisher Rear Cover (RRP 72, on page 11-330).
Enter Service Diagnostics Mode.
From the Main Menu, select “Sensor Tests/Finisher Sensors/Miscellaneous
Manually rotate the Decurler Cam Shaft such that the photo interrupter toggles the Decurler Cam Home Sensor.
Does the display indicate the Decurler Cam Home Sensor toggling between H & L?
Yes No

Remove the Rear Cover and the Board Cover (RRP 72, on page 11-330).
Measure the voltage between the Finisher Control Board P849-2 (see figure page 2-46) and Finisher frame ground.
Again manually rotate the Decurler Cam Shaft such that the photo interrupter toggles the Decurler Cam Home Sensor.
Does the voltage toggle between +5 VDC and 0 VDC?
Yes No

Measure the voltage at the Decurler Cam Home Sensor pin 2 (yellow) and Finisher frame ground.
Once again manually rotate the Decurler Cam Shaft such that the photo interrupter toggles the Decurler Cam Home Sensor.
Does the voltage toggle between +5 VDC and 0 VDC?
Yes No

Measure the voltage at Decurler Cam Home Sensor pin 1 (gray).
Does the voltage measure +5 VDC?
Yes No

Measure the voltage between the Finisher Control Board P849-3 (see figure page 2-46) and Finisher frame ground.
Does the voltage measure +5 VDC?
Yes No

Replace the Finisher Control Board (RRP 77, on page 11-336).

Repair or replace the wiring harness between the Finisher Control Board and the Decurler Cam Home Sensor.

A B C D

| Error Code | Chain / Link | Front Panel Message |
|---|---|---|
| 122 | 12-267 | FINISHER ERROR 122 DECURLER FAILURE (*Continued*) |

A B C D

Measure the voltage at the Decurler Cam Home Sensor pin 3 (violet) and Finisher frame ground.
Does the voltage measure 0 VDC?
Yes No

Measure the voltage between the Finisher Control Board P849-1 (see figure page 2-46) and Finisher frame ground.
Does the voltage measure 0 VDC?
Yes No

Replace the Finisher Control Board (RRP 77, on page 11-336).

Repair or replace the wiring harness between the Finisher Control Board and the Decurler Cam Home Sensor.

Replace the Decurler Cam Home Sensor.

Repair or replace the wiring harness between the Finisher Control Board and the Decurler Cam Home Sensor.

Replace the Finisher Control Board (RRP 77, on page 11-336).

Replace the Finisher Control Board (RRP 77, on page 11-336).

| Error Code | Chain / Link | Front Panel Message |
|---|---|---|
| 123 | 12-281 | FINISHER ERROR 123 SET CLAMP FAILURE |

Remove the Finisher Rear Cover (RRP 72, on page 11-330).
Enter Service Diagnostics Mode.
From the Main Menu, select "Sensor Tests/Finisher Sensors/Miscellaneous."
Manually operate the Set Clamp Solenoid [see illustration in (RRP 75, on page 11-334) or (RRP 75, on page 11-334).
Rotate the Set Clamp Shaft (above the solenoid to enable manual operation of the Set Clamp Home Sensor) and observe the display for toggling between H and L of the Set Clamp Home Sensor.
Does the display toggle between H & L?

Yes

A

No

Remove the Board Cover (RRP 72, on page 11-330).
Measure the voltage between the Finisher Control Board P849-8 (see figure page 2-46) and Finisher frame ground.
Rotate the Set Clamp Shaft (above the solenoid to enable manual operation of the Set Clamp Home Sensor) and observe the display for toggling between H and L of the Set Clamp Home Sensor.
Does the voltage toggle between +5 VDC and 0 VDC?

Yes

B

No

Measure the voltage at the Set Clamp Sensor pin 2 (yellow) and Finisher frame ground.
Rotate the Set Clamp Shaft (above the solenoid to enable manual operation of the Set
Clamp Home Sensor) and observe the display for toggling between H and L of the Set
Clamp Home Sensor.
Does the voltage toggle between +5 VDC and 0 VDC?

Yes

C

No

Measure the voltage at Set Clamp Sensor pin 1 (gray).
Does the voltage measure +5 VDC?

Yes

D

No

Measure the voltage between the Finisher Control Board P849-9 (see figure page 2-46) and Finisher frame ground.
Does the voltage measure +5 VDC?

Yes

No

Replace the Finisher Control Board (RRP 77, on page 11-336).

Repair or replace the wiring harness between the Finisher Control Board and the Front Corner Sensor.

| Error Code | Chain / Link | Front Panel Message |
|---|---|---|
| **123** | **12-281** | **FINISHER ERROR 123 SET CLAMP FAILURE (*Continued*)** |

A B C D

Measure the voltage at the Set Clamp Sensor pin 3 (violet) and Finisher frame ground.
Does the voltage measure 0 VDC?
Yes No

Measure the voltage between the Finisher Control Board P849-7 (see figure page 2-46) and Finisher frame ground.
Does the voltage measure 0 VDC?
Yes No

Replace the Finisher Control Board (RRP 77, on page 11-336).

Repair or replace the wiring harness between the Finisher Control Board and the Set Clamp Sensor.

Replace the Set Clamp Sensor (RRP 75, on page 11-334).

Repair or replace the wiring harness between the Finisher Control Board and the Set Clamp Sensor.

Replace the Finisher Control Board (RRP 77, on page 11-336).

Replace the Finisher Control Board (RRP 77, on page 11-336).

| | | |
|---|---|---|
| **124** | **12-350** | **FINISHER ERROR 124 COMMUNICATION FAILURE** |

There are no diagnostics routines or test procedures for problems involving serial communications. It is recommended to address the following suspect components/assemblies in order.

- Replace the Finisher Control Board (RRP 77, on page 11-336).
- Replace the Engine Controller Board (RRP 42, on page 7-206).
- Perform a continuity check on the pertinent wires / harnesses involved in serial communication between the Printer and the Finisher [Refer to the Printer and Finisher Wiring Diagrams].

| | | |
|---|---|---|
| **125** | **12-399** | **FINISHER ERROR 125 STAPLE MODE LOGIC FAILURE** |

There are no diagnostics routines or test procedures for problems involving serial communications. It is recommended to address the following suspect components/assemblies in order.

- Replace the Stapler Assembly (RRP 82, on page 11-342).
- Replace the Finisher Control Board (RRP 77, on page 11-336).
- Perform a continuity check on the wiring harness between the Finisher Control Board and the Stapler [Refer to the Finisher Wiring Diagram].

| Error Code | Chain / Link | Front Panel Message |
|---|---|---|
| 124 | 07-250 | TRAY COMMUNICATION FAILLURE |

Check the voltage on the Tray Module PWB between J 555-1 and ground.
Is the voltage +5VDC?
Yes No

Using the wiring diagrams, check and repair the +5VDC circuits to Tray Module PWB J555-1.
Check the voltage on the Tray Module PWB between J 555-3 and ground.
Is the voltage +24VDC?
Yes No

Using the wiring diagrams, check and repair the +24VDC circuits to Tray Module PWB J555-3.
Do all of the resistances indicate continuity?
Yes No

Check for broken wires or bad contacts on connections that are not 1 ohm or less.

Change the following parts in the order of priority as listed:
1. Interface Board
2. Tray Module Circuit Board
3. Engine Control Board
4. Image Processor Board

Turn off the power. Check for continuity between the following points:
- From MCU PWB J407-B10 to Tray Module PWB J541-7.
- From MCU PWB J407-B9 to Tray Module PWB J541-9.
- From MCU PWB J407-B11 to Tray Module PWB J541-5.
- From MCU PWB J407-B12 to Tray Module PWB J541-4.

Change the following parts in the order of priority as listed:

1. Interface Board
2. Tray Module Circuit Board
3. Engine Control Board
4. Image Processor Board

| Error Code | Chain / Link | Front Panel Message |
|---|---|---|
| **125** | **009-910 (K)**<br>**009-911 (M)**<br>**009-912 (C)**<br>**009-913 (Y)** | **TRAY COMMUNICATION FAILLURE** |

1. Check the installation of the Print Cartridge.
2. Clear the Tech Rep Fault for errors 009-910 through 009-913 (refer to instructions below).
3. Try changing the indicated Print Cartridge.
4. Check for an open wire or poor contact between the Print Cartridge and the Engine Control Board.
   - Yellow, J-151 to J-405
   - Magenta, J-152 to J-405
   - Cyan, J-153 to J-405
   - Black, J-154 to J-405
5. Replace the Eingine Control Board ((RRP 42, on page 7-206).

Prior to troubleshooting for an open circuit (step #4 above) or replacing the Engine Control Board (step #5 above), clear the Tech Rep Fault for any of these codes using the following procedure:

1. Enter **Service Diagnostics**.
2. Select **NVRAM Acces** and press **OK**.
3. Select **Clear Tech Rep Faults** and press **OK**.
4. Select link codes **009-910** through **009-913** and press **OK**.

# Troubleshooting

For Error Codes and Messages, refer to Diagnostics, Error Codes and Messages on page 2-31.

The Phaser 7700 Printer has built-in diagnostics to aid in troubleshooting problems with the printer. The Service Diagnostics Menu provides a means to test sensors, motors and solenoids. Diagnostics also contains built-in test prints, and calibration and cleaning procedures. For details on error codes, messages and service diagnostics, Diagnostics, Error Codes and Messages on page 2-31.

**Note** Before troubleshooting power supply problems, disconnect the Auxiliary Feeder or Finisher, if installed, and restart the printer. Verify the problem is still present or refer to the appropriate Option troubleshooting section.

This section is ordered as follows:

### Troubleshooting Power Supplies and Interlocks

- AC Power
- Low-voltage Power Supplies [LVPS]
- 3.3 VDC and 5 VDC LVPS
- 24 VDC LVPS
- 24 VDC Interlock Circuit
- 5 VDC Interlock Circuit

### System problems where the printer will not come to "Ready."

- Printer does nothing when power is turned On
- Fan on, Front Panel LED never On
- Fan on, Front Panel LED on, no Front Panel message
- Front Panel continually displays Xerox Phaser 7700 splash screen
- Front Panel continually displays “WARMING UP”
- Front Panel displays “FATAL FAULT ENCOUNTERED”

# Troubleshooting Network Problems

## Operating System and Application Problems

- Macintosh printing problems
- Windows printing problems

## Media Jams and the Paper Path

- Media-based problems
- Multiple-sheet picks
- Mis-picks
- Skewed images
- Damaged prints
- Fuser Jams
- Exit Jams

## Print Image Quality Problems

- Light (undertones) prints (all colors)
- Blank Prints
- One color is faded
- Missing bands in direction of paper travel
- Streaks in direction of paper travel
- Banding
- Streaks parallel with the leading edge
- Random missing spots
- Random spotting
- Repetitive mark appears on each print
- Background contamination
- Infused image or image rubs off easily
- Toner on back of print
- Image is mis-registered on paper
- Residual image or ghosting

# Troubleshooting Power Supplies and Interlocks

## Troubleshooting AC Power

1. Verify that the AC Input Voltage is present and within specifications.
2. Verify that the Reset button on the GFI is depressed.
3. Reconnect AC power. If the GFI trips immediately with the Power switch Off, disconnect AC power, remove the rear cover and metal shields. Check for shorts in the AC Circuit from the GFI to the Noise Filter, the AC Driver Board and up to the Power Switch.
4. Switch the printer on. If the GFI trips, unplug the printer, remove the fuser, then retest. Disconnect AC power, remove the rear cover and metal shields. Check for shorts in the AC Circuit from the Power Switch back to the AC Driver Board and to the bottom connector on the three Low-voltage Power Supplies.
5. Remove the rear cover and the two metal shields. Connect AC Input and switch the printer On. Check for AC voltage at:
   - J72 on top of the GFI, if not present replace the GFI.
   - Between FS76 and FS77 of the Noise Filter, if not present replace the Noise Filter.
   - Into and out of the Power Switch, if not present replace the Power Switch.
   - The connector at the bottom of the +3.3 VDC, +5 VDC and +24 VDC LVPS, if not present replace the AC Drive Board.

**Note** The GFI, Noise Filter and AC Drive Board are all part of the AC Electrical Chassis, see (RRP 49, on page 7-214).

## Troubleshooting the Low-voltage Power Supplies

+3.3 VDC, +5 VDC and +24 VDC voltages are supplied by individual LVPS boards. The 24 VDC LVPS requires the presence of a +5 VDC enabling signal to operate.

**Note** Before troubleshooting power supply problems, disconnect the Lower Tray Deck or Finisher, if installed, and restart the printer. Verify the problem is still present or refer to the appropriate option troubleshooting section.

1. Verify the printer is plugged in and the GFI is not tripped, Troubleshooting AC Power on page 3-89
2. Remove the Image Processor Board cover and metal plate. Disconnect the Relay Board Power Connector J300.
3. Turn the printer On. Check for +3.3 VDC at J300-1, -2, -3 & -11. Check for +5 VDC at J300-7. If 5 VDC is present check for +24 VDC at J300-9.
4. If no DC voltages are present, Troubleshooting AC Power on page 3-89.
5. If +5 VDC is present but +3.3 VDC is not, Troubleshooting the +3.3 VDC and +5 VDC LVPS on page 3-90.
6. If +3.3 VDC is present but +5 VDC and +24 VDC are not, Troubleshooting the +3.3 VDC and +5 VDC LVPS on page 3-90.
7. If 5 VDC is present but 24 VDC is not, Troubleshooting the +24 VDC LVPS on page 3-90.

## Troubleshooting the +3.3 VDC and +5 VDC LVPS

**Note** Turn the printer power Off and disconnect the power cord.

1. Remove the rear cover and rear shield.
2. Disconnect the harnesses to connectors P501, P574, P801 and 2ndBTR of the T1 HVPS, remove 3 screws and lower the T1 HVPS to horizontal (RRP 44, on page 7-208).
3. Connect AC Power and turn the printer On.
4. Check for proper AC Voltage at the connector at the bottom of the LVPS. If not present go to the Troubleshooting AC Power section (link).
5. Check for +3.3 VDC or +5 VDC at the connector at the top of the LVPS. If correct voltage is not present, unplug the connector and retest. If no voltage is present replace the LVPS. If the voltage returns check the harness, Image Processor Board, Engine Board and Relay Board for shorts.

## Troubleshooting the +24 VDC LVPS

**Note** Turn the printer power Off and disconnect the power cord.

**Note** The +24 VDC LVPS requires a +5 VDC enable signal to operate. Ensure proper operation of the +5 VDC LVPS before proceeding.

1. Remove the rear cover and +24 VDC PS metal shield.
2. Connect AC Power and turn the printer On.
3. Check for proper AC Voltage at the connector at the bottom of the LVPS. If not present go to the Troubleshooting AC Power section.
4. Check for the +5 VDC enable signal at P505-4 (grey wire). If not check the same signal at the Engine Interface Board P537-6. If not present replace the Engine Control Board (RRP 42, on page 7-206), then the Engine Interface Board (RRP 43, on page 7-207).
5. Check for +24 VDC at any of the orange wires of connector P502 at the top of the LVPS. Unplug the connector and retest. If still no voltage, replace the LVPS (link). If the voltage returns check the +24 VDC circuit for shorts to frame ground in the wiring harness, Engine Board, Relay Board and Interlock Circuit.

## Interlock Circuit Diagram

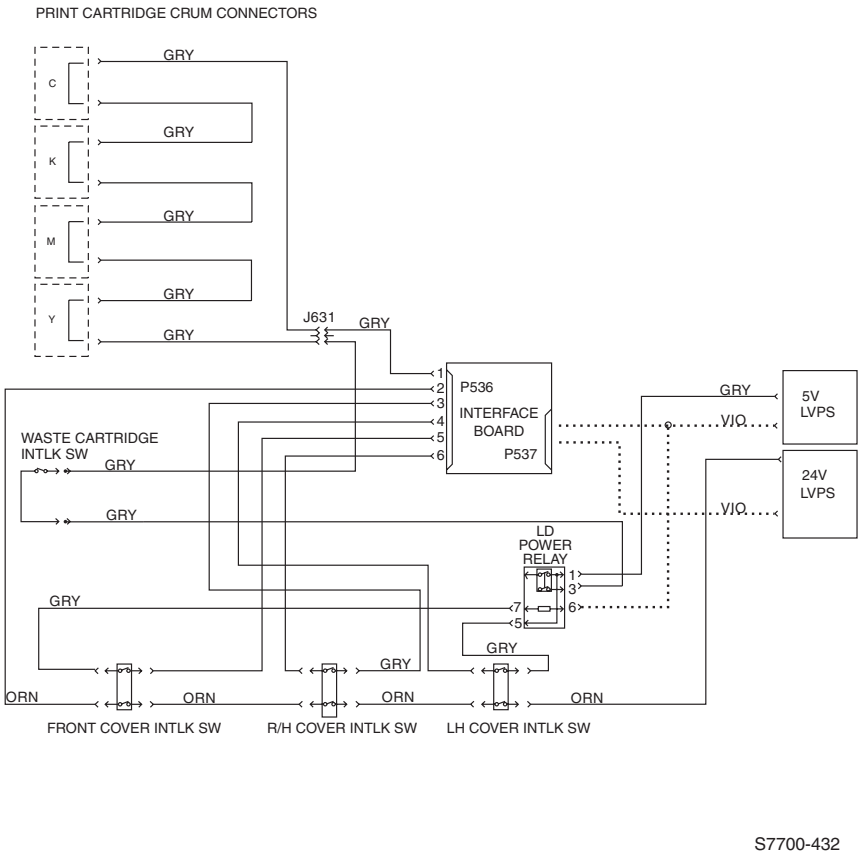


**Figure 3-1 Circuit Diagram**

## The +24 VDC Interlock Circuit

The +24 VDC Interlock Circuit runs from the +24 VDC LVPS to the L/H Door Interlock Switch, the R/H Door Interlock Switch, and the Front Door Interlock Switch back to the Engine Control Interface Board, then into the Engine Control Board. Opening this circuit prevents the Laser Unit and the High-voltage Power Supplies from operating.

1. With all doors closed and printer power On, check for +24 VDC between P535-2 of the Engine Control Interface Board and frame ground.
2. If +24 VDC is not present, see Troubleshooting the +24 VDC LVPS on page 3-90 to verify the +24 VDC LVPS is working.
3. If working, then check the LH Cover Interlock Switch, the RH Cover Interlock Switch and the Front Cover Interlock Switch.

## The +5 VDC Interlock Circuit

The +5 VDC Interlock Circuit runs from the +5 VDC LVPS to the L/H Door Switch, then to the Engine Control Interface Board, out to the R/H Door Switch, back to the Engine Control Interface Board, out to the Front Door, through the coil of the LD Power Relay and back to the 5+ VDC LVPS. This circuit helps identify which door has interrupted the +24 VDC circuit.

If the circuit is complete, LD Power Relay activates, and 5+ VDC is sent to the Waste Cartridge Installed Interlock Switch and through all four Print Cartridge connectors and to the Engine Control Interface Board. This signal merely confirms that all Print Cartridges are installed. Individual missing components are identified at power-up or when a door is closed (completing the +24 VDC circuit) and the Engine Control Board interrogates the Print Cartridge NVRAM. If the Print Cartridges are present, then the Waste Toner Cartridge is missing by default.

1. With all doors closed and printer power on, check for +5 VDC between P536-4 of the Engine Control Interface Board and frame ground. If not present, check the LD Relay and the LH Cover Interlock Switch.
2. Check for +5 VDC between P536-6 of the Engine Control Interface Board and frame ground. If not present, check the Front Cover Interlock Switch.
3. Check for +5 VDC between J568-7 (top pin) of the LD Power Relay and frame ground. If not present, check the RH Cover Interlock Switch.
4. Check for +5 VDC between P536-1 of the Engine Control Interface Board and frame ground. If not present, check the LD Power Relay, and the circuit through the Waste Cartridge Sensor and the four Print Cartridge connectors.
5. If +5 VDC is present, then replace the Engine Control Board (RRP 42, on page 7-206).

# Troubleshooting When the Printer Does Not Come to a "Ready" State

## Printer Does Nothing When Power Switched On

Refer to Troubleshooting AC Power on page 3-89.

## Fans On, Front Panel LED Never On

- Check the Image Processor Board DIP Switches see You can print a service Diagnostics menu map by highlighting "Print Service Menu Map", using the arrow key and pressing OK. on page 2-35.
- Refer to Troubleshooting the Low-voltage Power Supplies on page 89.
- Replace the Front Panel Cable (RRP 4, on page 7-157).
- Replace the Front Panel (RRP 4, on page 7-157).
- Replace the Internal Hard Drive (RRP 40, on page 7-203).
- Replace the Image Processor Board (RRP 39, on page 7-202).

## Fans On, Front Panel LED is Red, No Front Panel message

- Replace the Front Panel Cable (RRP 4, on page 7-157).
- Replace the Front Panel (RRP 4, on page 7-157).
- Replace the Internal Hard Drive (RRP 40, on page 7-203).
- Replace the Image Processor Board (RRP 39, on page 7-202).

## Front Panel Continually Displays the Xerox Phaser 7700 Splash Screen

- Enter Service Diagnostics Mode. Refer to Entering Service Diagnostics Mode on page 2-35.
- Watch the Front Panel during the "initializing" period for messages indicating any printer faults.
- View the Fault List for indications of any printer faults.
- Replace the Engine Control Board (RRP 42, on page 7-206).
- Replace the Engine Control Interface Board (RRP 43, on page 7-207).
- Replace the Hard Disk (RRP 40, on page 7-203).
- Replace the Image Processor Board (RRP 39, on page 7-202).

## Front Panel Continually Displays "WARMING UP - PLEASE WAIT" Message

See the procedure for "Error 86 High-voltage Power Supply Failure" on page 2-70.

### Front Panel displays "Fatal Fault Encountered" message

See procedure for "Error 81 Controller to Engine Communications Failure" on page 2-70.

## Troubleshooting - Printer Comes to a "Ready" State

### False LH Door, RH Door, or Front Door Open Messages

See procedure for "Troubleshooting the Interlock Circuit", on page 3-91.

### False "Load Paper in Tray [1,2,3,4]" Message

In order for the printer to recognize paper in the paper tray, one or both of the top two Paper Size Switches must be closed, the Tray Level Sensor must be actuated by the lift mechanism and the No Paper Sensor must be deactuated.

1. Remove the Paper Tray and check for damage. Check the No Paper Sensor actuator for damage and freedom of movement. If it is a Universal Tray, swap the tray with another if available.
2. If available, swap the Feeder Assembly with one from another tray. (Does not apply to HCF Tray 4.)
3. Enter Service Diagnostics Mode and run the sensor test. Check sensor operation by lifting and lowering the No Paper Sensor Lever while observing the display.
4. Verify continuity of the wiring between the No Paper Sensor and the Control Board.
5. If the problem is with Tray 2, 3 or 4, replace the Auxiliary Feeder Control Board (RRP 1-59).
6. Replace the Engine Control Board (RRP 42, on page 7-206).

### False "Tray [1,2,3,4] Missing" Message

In order for the printer to recognize the presence of a paper tray, one or both of the top two Paper Size Switches must be closed.

**Note** There are special instances where a false "Tray Missing" error can be reported. Check the fault list to ensure that no other errors are present.

1. Check the Tray Level Sensor actuator for damage and freedom of movement. Check the Paper Size Switches for damage.
2. Enter Service Diagnostics Mode and run the sensor test. Check the Level Sensor operation by removing and reinserting the paper tray while observing the display.
3. If available, swap the Feeder Assembly with one from another tray. (Does not apply to HCF Tray 4).
4. Verify continuity of the wiring between the No Paper Sensor and the Control Board.
5. If the problem is with Tray 2, 3 or 4, replace the Auxiliary Feeder Control Board (RRP 60, on page 7-229).
6. Replace the Engine Control Board (RRP 42, on page 7-206).

## Tray 1 Will Not Lift

In order for Tray 1 to lift, the +24 VDC interlock circuit through the LH, RH and Front Doors must be complete, one or both of the top two Paper Size Switches must be closed, and the Tray Level Sensor must be deactuated.

1. Determine if the Feed/Lift Motor operates normally, if the motor operates but does not sound right, or if the motor does not operate at all.
2. If the Feed/Lift Motor operates normally, check the paper tray for damage. If the printer has an Auxiliary feeder, then swap the Universal Tray with another and retest.
3. If the Feed Lift Motor operates but does not sound normal, check the drive coupling for damage. If the printer has an Auxiliary feeder, then swap the one from another tray and retest. Also swap the Feeder Assembly with one from another tray and retest.
4. If the Feed/Lift Motor does not operate and another is available, swap the Feeder Assembly and retest.
5. Inspect the wiring harness for damage and continuity.
6. Replace the Auxiliary Feeder Control Board (RRP 60, on page 7-229).
7. Replace the Engine Control Board (RRP 42, on page 7-206).

## Tray 2, 3 or 4 Will Not Lift

In order for a paper tray to lift, the +24 VDC interlock circuit through the LH Door of the Auxiliary Feeder must be complete, one or both of the top two Paper Size Switches must be closed, and the Tray Level Sensor must be deactuated.

1. Determine if the Feed/Lift Motor operates normally, if the motor operates but does not sound right, or if the motor does not operate.
2. If the Feed/Lift Motor operates normally, check the paper tray for damage. If it is a Universal Tray then swap the tray with one of the others and retest.
3. Ensure that all packaging material has been removed.
4. If the Feed Lift Motor operates but does not sound normal, check the drive coupling for damage. If it is a Universal Tray swap the tray with another and retest. Also swap the Feeder Assembly with one from another tray and retest. For HCF Tray 3 and 4 carefully inspect the gear drive mechanism for damage. Swap the Feed/Lift Motor with one from another tray.
5. If the Feed/Lift Motor does not operate swap the Feeder Assembly or the Feed/Lift Motor with one from another tray and retest. Inspect the wiring harness for damage and continuity.
6. Replace the Auxiliary Feeder Control Board (RRP 60, on page 7-229).
7. Replace the Engine Control Board (RRP 42, on page 7-206).

## Tray 2, 3 and 4 Will Not Lift or Printer Will Not Recognize the Auxiliary Feeder

There are two circuits connecting the printer to the auxiliary feeder: the Power Circuit and the Serial Data Link.

1. Check that the auxiliary feeder is properly connected to the back of the printer.
2. From the Front Panel check to see if the auxiliary feeder is recognized by the printer.
3. Remove the rear panel of the auxiliary feeder. Check for presence of +5 VDC, +24 VDC and +3.3 VDC at the auxiliary feeder control board P555-2, -4 and -6. Check for continuity of the DC return lines.
4. Check the continuity of the serial data link circuit by verifying continuity between Engine Control Board P407B-9, -10, -11, -12, -13 and -14, and the auxiliary feeder Board P541-1, -2, -3, -4, -5 and -6.
5. Replace the Auxiliary Feeder Control Board (RRP 60, on page 7-229).
6. Replace the Engine Control Board (RRP 42, on page 7-206).

## Printer Will Not Recognize the Finisher

The Finisher is connected to the printer by a complementary pair serial data link. The Finisher also generates its own +5 VDC from +24 VDC supplied by the printer.

1. Check that the Finisher is properly connected to the printer.
2. From the Front Panel check to see if the Finisher is recognized by the printer.
3. Remove the Rear Cover and Board Cover from the Finisher
4. Check for presence of +24 VDC between the Finisher Board P844-2 and Finisher frame ground.
5. Turn the power Off and check the continuity of the serial data link circuit by verifying continuity between P531B-9 through -16 on the Engine Control Board, and P843-1 through -8 on the Finisher Board.
6. Replace the Finisher Board (RRP 77, on page 11-336).
7. Replace the Engine Control Board (RRP 42, on page 7-206).

# Troubleshooting the Toner Dispense/Auger/Developer System

Failures relating to Toner Dispense, Toner Auger, and Developer System include:

- False “Replace Toner Cartridge” message
- ATC Sensor errors 12, 13, 14, and 15
- Faded or missing primary colors

## Checking the Toner Cartridge

1. Ensure the Toner Cartridge is correctly installed and rotated into its opened position.
2. Remove the Toner Cartridge in question.
3. Inspect the cartridge’s cap to ensure it is securely taped in placed.
4. Tilt the cartridge back and forth to ensure it contains toner.
5. Rotate the Gear at the rear of the cartridge. You should hear the Auger Coil move inside the Toner Cartridge. If the Auger Coil and Gear rotate correctly, the cartridge is good.

**Figure 3-2 Toner Cartridge Gear**

## Checking the Toner Auger System

1. Power-up the printer in Service Diagnostics mode.
2. Override the Front Cover Interlock Switch.
3. Examine the toner port of the system in question. Usually, the port should be completely filled to the rim.

s7700-558

**Figure 3-3 Toner Cartridge**

4. If toner is not level at the port, then the toner in the Toner Dispense Assembly has been augered into the Developer but no fresh toner is being delivered from the Toner Cartridge to the Toner Dispense Assembly.

**Note** The Auger Toner level may also appear low if it was recently emptied by heavy printing and has not yet been completely filled up by successive dispense cycles.

5. Leaving the Toner Cartridge out of the printer, run the Toner Dispense Motor test for the system in question. Look at the far end of the Toner Cartridge cavity and observe the Dispense Motor Gear rotate. Also, look along the right side of the Toner Cartridge cavity. You should see the Drive Shaft of the Toner Auger System rotate as the Toner Motor operates. Inspect the Drive Shaft mechanism and the Motor wiring.

   - Replace the Toner Dispense Motor (RRP 29, on page 7-188) if it or its wiring is bad.
   - Replace the Toner Dispense Base Assembly (RRP 25, on page 7-180) if the Shaft Drive mechanism is bad.

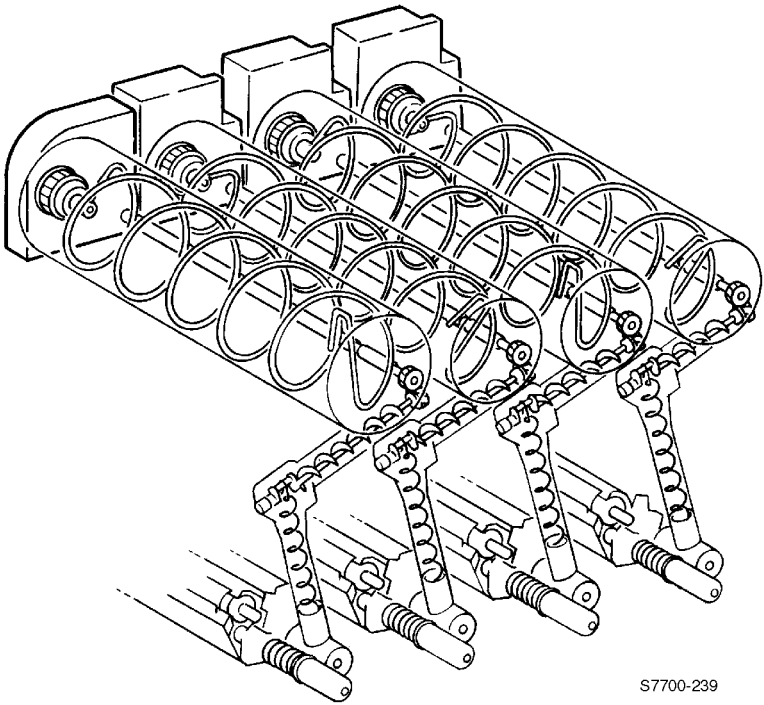


**Figure 3-4 Toner Dispense Assembly**

6. Print 2 to 3 Solid Fill prints using the primary color in question. The toner level at the port should drop as toner is augered into the Developer.

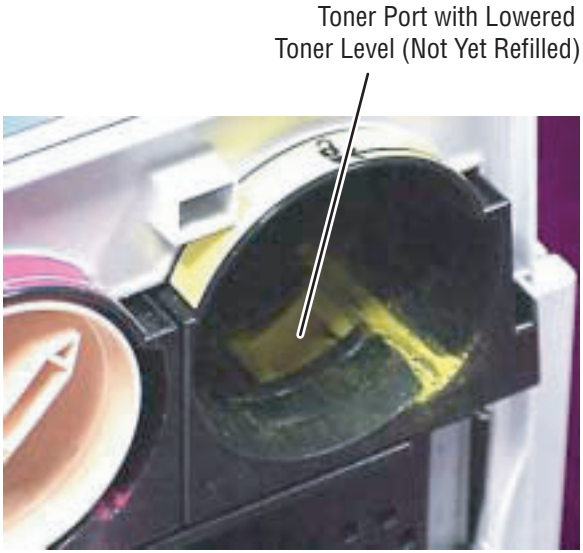


**Figure 3-5 Toner Port**

7. If the Drive Shaft rotates but the toner level at the port does not drop, replace the Toner Dispense Assembly (RRP 25, on page 7-180).

## Checking the Developer ATC Sensor

1. Power-up the printer in Service Diagnostics mode.
2. Scroll to the **Adjustment Calibration: Tone Up/Down** menu item. Press **OK**. The test displays information regarding the Developer ATC Sensors. Press **OK** to read the values for each Developer.
3. Examine the ATC values for primary color Developer you are troubleshooting. For a properly operating ATC Sensor, you should look at the values (yellow shown here) similar to these:
   <Tone Up/Down>
   Y: SensWarn=0 Pages=34
   ATC Control=470
   ATC Corr=459
   Ave ATC=472
   ATC Vol=214
4. Record the ATC values and then exit Service Diagnostics.
5. Remove the Toner Cartridge of the color you are troubleshooting.
6. Print 15 A-size pages of 100% Solid Fills of the primary color you are troubleshooting.
7. Turn Off the printer and then power-up the printer in Service Diagnostics mode.
8. Re-run the **Adjustment Calibration: Tone Up/Down** menu item.
9. Examine the ATC values for the color you are testing. As toner is consumed but no fresh toner is augered into the Developer Housing, the toner concentration will fall. In a properly working Developer Housing, the values **Ave ATC** and **ATC Vol** should rise (about 20 points) to reflect this concentration change. (A change of about 30 points should trigger a Replace Toner Cartridge message.) **ATC Control** and **ATC Corr** should remain unchanged.
10. If the ATC values do not change as expected as toner is consumed in the Developer, replace the ATC Sensor.

**Note** For ATC Sensor errors 12, 13, 14, and 15, be sure to clear the Tech-Rep Faults 09-380 to 09-383 using the Service Diagnostic's **NVRAM Access: Clear Tech Rep Fault**.

## Checking the Developer

If, after these checks, the problem still exists:

1. Inspect the wiring harnesses leading to the Developer for nicks, pinched wiring, or poor connections.
2. If the wiring harnesses are OK, replace the Developer (RRP 27, on page 7-185).
3. After installing a new Developer, print 25 100% Solid Fill, A-size pages to ensure it prints correctly. If the problem still exists, replace the Engine Control Board (RRP 42, on page 7-206).

## Tips

### ATC Sensor Setup

When you replace an ATC Sensor or a Developer, make sure to program the ATC Sensor's calibration value into the printer's engine's NVRAM. Use the **Adjustment/Calibrations** menu's **ATC Sensor Setup Test**.

Backup the new engine NVRAM values to the printer's hard drive using the **NVRAM Access** menu's **Store Engine NVRAM** menu item.

Replacement ATC Sensors and the ATC Sensor on a replacement Developer Housing both include a tear off sticker with the Sensor's calibration value printed on it. Apply the sticker near to the corresponding Developer, behind the Waste Cartridge. (Next to the laser-cleaning slot is good location.)

### Photo Mode

Among other actions, selecting Photo Mode causes the printer to perform a Developer bead agitation cycle between printing each page. This allows the electrical charge applied to the toner in the Developer Housing to be evenly distributed to all the toner. This ensures better, more even, toner transfer to the Accumulator Belt resulting in the colors of the last high-coverage print looking the same as the colors in the first high-coverage print.

## Bead Carryout (BCO)

The ATC Sensor magnetically measures the ratio of toner particles to developer carrier beads, not the volume. Under a combination of rare circumstances and component tolerances, it is possible fo rthe carrier beads to be pulled from the Developer during printing; this is called bead carryout or BCO.

The Engine Control Board will only auger in the amount of toner to achieve the desired ratio with the *remaining* carrier beads. If beads are being carried out, then less and less toner will be augered into the Developer Housing. no error message will necessarily be displayed. Printing of that primary color will get progressively lighter and lighter. In such a case, the Developer Housing must be replaced.

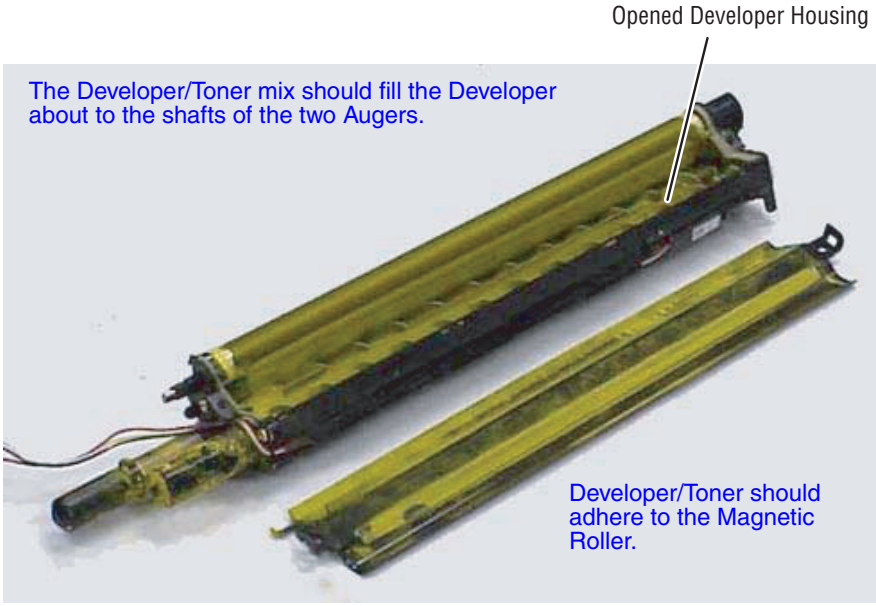


**Figure 3-6 Developer Housing**

## Print Cartridges

The four Print Cartridges in the printer are rarely the cause of any print quality problems. A Print Cartridge is a fairly simple component; there is very little that can go wrong with it. Realistically, the only reason a Print Cartridge should be replaced is for a repeating defect to the cartridge's photoconductive drum.

# Operation System and Application Problems

## Macintosh Printing Problems

### Image Never Prints

Printer acts as if it is receiving data, but nothing comes out of printer or it goes back to "Ready" mode without printing image.

1. Power cycle the printer and print again.
2. Make sure that the correct Phaser 7700 printer icon was selected in the **Chooser**. Try printing the job again.
3. In the **Chooser** or the print dialog, switch background printing to Off. Try printing the job again.
4. Ensure that the printer can print by printing an internal front panel test print.

### Image Prints in Black-and-White

1. In the print driver dialog box, make sure the **Color/Grayscale** option has been selected.
2. Check the version.
3. Ensure the driver setting TekColor is not set to Monochrome mode.

### Image is Rotated 90 Degrees

1. In the application's **Page Setup**, make sure that the image is selected to print in portrait or landscape orientation to match the document. Also ensure the selected paper size is correct.
2. Ensure that the printer can print by printing an internal front panel test print.

## Windows Printing Problems

### Image never prints

Printer acts as if it is receiving data, but nothing comes out of printer or the printer goes back to "Ready" mode with out printing image.

1. Try printing from the printer driver.
2. Try printing from another application.
3. Try printing to another printer.
4. Try printing from another computer.
5. Try printing an internal front panel test print.

## Troubleshooting Network Problems

The Phaser 7700 printer maintains 4 logs in memory detailing network functions. The logs contain TCP/IP, Netware and AppleTalk initialization events. The logs can also be accessed remotely via CentreWare.

The logs list events chronologically. The log is limited in length; when the log is full the printer stops recording data to the log. The logs are stored on the Hard Drive so only new data is stored each time the printer's power is cycled.

There is a Connection Setup Page, Configuration Page and a network reset available for troubleshooting Network problems.

To print an Event Log, Runtime Log or Configuration Page:

1. Enter normal 'Customer Mode.'
2. From the main menu, highlight **Support Menu** and press **OK.**
3. Scroll and highlight **Network Questions** and press **OK.**
4. Highlight the appropriate menu item from the list and select **OK.**
5. The page should now print.

# Media Jams and the Paper Path

## Media-based Problems

1. Check that the correct type of media is being used; Supported Paper Weights, Page Sizes and Print Area on page 1-27 for the correct media types and weights. The customer should be using a quality laser printer paper. The printer may have trouble picking slick-finish paper.
2. Only Phaser 7700 series transparency film should be used in this printer.
3. Inspect the paper for bent, torn, or folded corners.
4. Ensure that the correct media type is set in the front panel.
5. Ensure that the paper guides are set correctly.
6. Ensure that the media is a supported type for the tray picked from. Tray 1 supports paper, transparencies, and thin cover/index paper. Trays 2-4 support paper only. The MPT supports all types.

## Multiple-sheet Pick

1. Ensure that the paper is in good condition and appropriate for a laser printer; quality office laser printer paper works best.
2. Ensure that the printer is printing within its environmental specifications by using the built-in service diagnostics temperature test.
3. Ensure that the paper is correctly loaded in the tray and the tray has not been over filled.
4. Try loading paper from a fresh ream. Flip the paper over.
5. Clean the pick rollers with a clean, dry, lint-free wipe.
6. Replace the paper pick rollers.
7. Check the tray's retard roller for damage.
8. Replace the paper tray.

## Mis-pick

1. Check that the correct type of media is being used.
2. Try loading paper from a fresh ream. Flip the paper over.
3. Clean the pick rollers with a clean, dry, lint-free wipe.
4. Troubleshoot the pick roller assembly.

## Skewed Image

The image area is twisted or is not parallel with the sides of the page but the printer neither jams nor displays an error code.

1. Ensure that the paper guides are set correctly.
2. Check that the correct type of media is being used.
3. Ensure that the tray has not been over filled. (Skewed images are a common defect when the MPT is filled too high.)

## Damaged Prints

The printed page exits the printer either wrinkled, creased, or torn. The printer neither jams nor displays an error code.

1. Stop the paper in the paper path to determine where the media becomes damaged.
2. Feed paper through the printer from each of the available trays. Is the paper damaged when fed out of one tray but not when fed out of the others? If so, inspect the tray for damage, ensure that the media guides are set correctly and verify that the proper media is being used.
3. Feed paper from the multi-purpose tray. Is the paper damaged when fed out of multi-purpose tray? Inspect the multi-purpose tray for debris or obviously broken components that could be damaging the paper as it feeds out of the assembly and into the printer.
4. Inspect the paper feeder for debris or broken components.

The following components are associated with this specific problem. One or more of these components may have failed partially or completely. If you can not isolate the problem, replace each component listed below, one at a time, until the problem disappears.

- Fuser
- Accumulator Belt (usually appears with toner in creases or wrinkles).

## Fuser Jams

1. Is the paper in good condition and appropriate for a laser printer?
2. Is Xerox Series-7700 transparency film being used.
3. Is the printer printing within its environmental specifications?
4. Ensure that the loaded media matches the front panel settings.
5. Are the margins on the page greater than 3 mm?
6. Check the fuser area for debris.
7. Visually inspect the fuser baffle for burrs.
8. Test the fuser motor using Service Diagnostics.
9. Replace the Fuser (RRP 19, on page 7-174).
10. Replace the Engine Control Board (RRP 42, on page 7-206).

## Exit Jams

1. Is the paper in good condition and appropriate for a laser printer? Is the paper curling?
2. Is the printer printing within its environmental specifications?
3. Ensure that the loaded media matches the front panel settings.
4. Is the jam caused by a heavy, stiff paper being used for two-sided printing? In such cases, a lighter grade of paper should be used or face-up mode to the side output tray should be used.
5. Clean all the eject rollers with a clean, dry, lint-free wipe if debris is visible.
6. Does the exit sensor flag properly actuate its sensor? Test the sensor using Service Diagnostics.
7. Replace the Engine Control Board (RRP 42, on page 7-206).

# Print Image Quality Problems

## Light (undertone) Prints (all colors)

The overall image density is too light.

1. Ensure that the correct color correction was set in the driver.
2. Is the correct paper being used in the printer?
3. Ensure that the loaded media matches the front panel settings.
4. Verify the Bias Transfer Roller is not reaching its end-of-life by printing the Supplies Usage Page.
5. Run the Calibrate for Paper routine. From the Front Panel's **Support Menu**, select **Improve Print-Quality?** then select **Calibrate for Paper Menu** and press **OK**.
6. Cycle the power, which causes an Auto-Density Control Cycle to take place.
7. Replace the Bias Transfer Roller (RRP 17, on page 7-172).
8. Replace the High-voltage Power Supply (RRP 44, on page 7-208).

## Blank Prints

The entire image area is blank.

1. Generate a 100% Solid Fill Test print from the front panel.
2. Is the test print blank?
3. Open the door in the middle of the print job. Is there toner on the print unit and/or Accumulator Belt?
4. Cycle the printer power.
5. Using the Service Diagnostics Test Menu Functions beginning on page 2-35, test the shutter solenoid to ensure it opens and closes correctly. Remove a print cartridge and see the shutter open and close.
6. Inspect the wiring harness for loose or disconnected wiring connectors; check connectors P400 and P401 at the Engine Control Board.
7. Replace the High-voltage Power Supply (RRP 44, on page 7-208).
8. Replace the Image Processor Board (RRP 39, on page 7-202).
9. Replace the Engine Control Board (RRP 42, on page 7-206).

## One Color is Faded or Missing

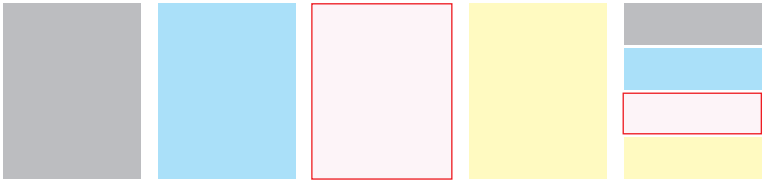

3041-39

1. Is the Toner Low Message being displayed on the front panel? Under high toner-coverage conditions, toner may be depleted during the toner low state but before the toner out message is displayed.
2. Ensure that the loaded media matches the front panel settings.
3. Run the **Calibrate for Paper** routine. From the Front Panel's **Support Menu**, select **Improve Print-Quality?,** then select **Calibrate for Paper Menu**.

**Note** Check the transfer setting before running calibrate paper. If the value is -4, you need to adjust the transfer settings.

4. Swap the print unit (of the bad color) with the one next to it. (Print units are not keyed to a particular color.) If the trouble follows the print unit, replace it.
5. Remove the print cartridge and verify that the laser shutter opens and closes using the Service Diagnostics Shutter Solenoid test.
6. Inspect and test the toner auger system. Ensure that the toner auger motor operates. Ensure that the toner dispense assembly is carrying toner from the toner cartridge to the developer.
7. Remove the Accumulator Belt Assembly and inspect the high-voltage knife connectors on the back side to ensure they are not damaged (RRP 35, on page 7-196).
8. Replace the Accumulator Belt Assembly.
9. Inspect the high-voltage wiring leading to the Replace the Accumulator Belt Assembly for damage.
10. Replace the Developer Housing Assembly (RRP 27, on page 7-185).
11. If the missing or faded primary color appears as speckle on the entire page, the high-voltage wire leading to that color's developer housing is grounded. Inspect the high-voltage wiring harness and power supply. Repair/replace as necessary.
12. Replace the Laser Unit (RRP 38, on page 7-200).
13. Replace the T3 High-Voltage Power Supply (RRP 44, on page 7-208).
14. Replace the T2 High-Voltage Power Supply (RRP 48, on page 7-213).

## Missing Band in Direction of Paper Travel

There are areas of the image that are extremely light or are missing entirely. These missing areas form wide bands that run along the page from leading edge to trailing edge in the direction of paper travel (B-size print shown). The printer displays no error code.

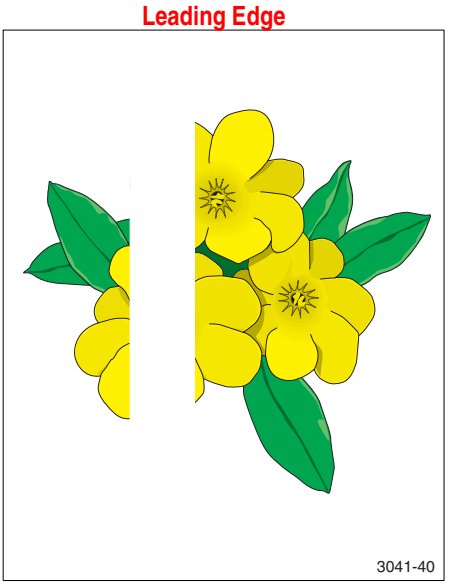


**Note** A-size prints are processed through the printer with the short edge of the print parallel to the direction of the paper path -- making print artifacts parallel to the short edge of the print.

1. Clean the laser windows with the cleaning wand located in the front door.
2. Print the solid fill test pages. From the front panel's **Printable Pages Menu,** select **Service Pages**, then select **Print Solid Fill Pages**.
3. If the missing bands only occur in a single primary color, swap the print cartridge.
4. Replace the Developer Housing Assembly (RRP 27, on page 7-185).
5. Replace the Laser Unit (RRP 38, on page 7-200).

## Streaks in Direction of Paper Travel

There are dark lines running along the page in the direction of paper travel from the leading edge to the trailing edge (B-size print shown). The printer displays no error code.

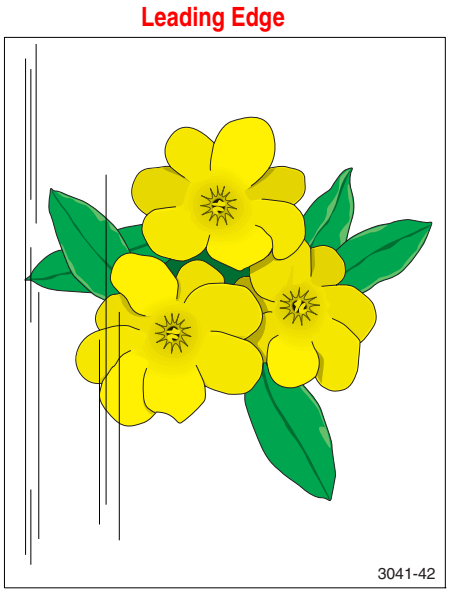


**Note** A-size prints are processed through the printer with the short edge of the print parallel to the direction of the paper path -- making horizontal print artifacts parallel to the shot edge of the print.

B-size prints are processed through the printer with the long edge of the print parallel to the paper path -- making horizontal artifacts parallel to the long axis of the print.

1. Check the end of life for each of the consumables by printing the supplies usage page. From the front panel's **Printable Pages Menu**, select **Print Supplies Page**.
2. Run the solid fill test pages. From the front panel's **Printable Pages Menu**, select **Service Pages**, then select **Print Solid Fill Pages.** If the missing bands only occur in a single primary color, replace the print cartridge of the affected color.
3. Swap print cartridges and run another test print.

**Note** Under some circumstances, streaking may occur in the margin of SRA3-size paper. This is due to the edges of the paper extending beyond the end of the imaging components. print-quality in the margins of SRA3 paper is not guaranteed.

4. Inspect the Accumulator Belt cleaner, replace the cleaner, if necessary.
5. Run the Remove Print Smears routine. From the front panel's **Support Menu**, select **Improve Print-Quality?**, then select **Remove Print Smears**.
6. Replace the Developer Housing Assembly (RRP 27, on page 7-185).
7. Remove the print cartridge and (with a flashlight) check for debris along the edge of the developer housing.

## Streaks Parallel with the Leading Edge

There are dark lines running parallel with the leading edge of the print, perpendicular to direction of paper travel (B-size print shown). The printer displays no error code.

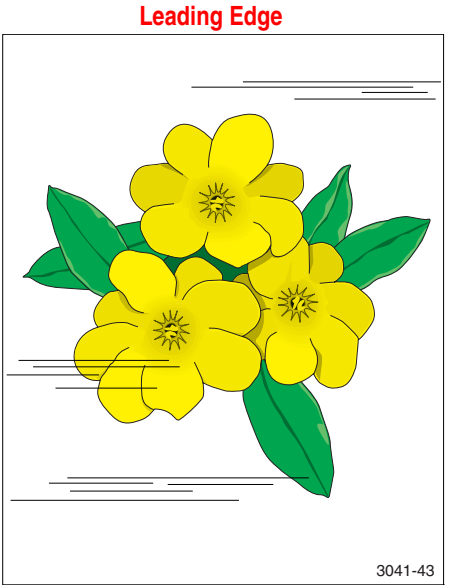


**Note** A-size prints are processed through the printer with the short edge of the print parallel to the direction of the paper path -- making print artifacts parallel to the long edge of the print.

B-size prints are processed through the printer with the long edge of the print parallel to the paper path -- making artifacts parallel to the short axis of the print.

1. Inspect the paper that is loaded in the paper tray. Is the paper wrinkled, dimpled, or show any signs of having a high moisture content?
2. Does the band repeat at a specific interval? If so, troubleshoot using the Repeating Defects topic.
3. Run the Remove Print Smears routine. From the front panel's **Support Menu**, select **Improve Print-Quality?**, then select **Remove Print Smears**.
4. If the test prints are all okay, but prints from an application are not, replace the Image Processor Board (RRP 39, on page 7-202).

## Banding

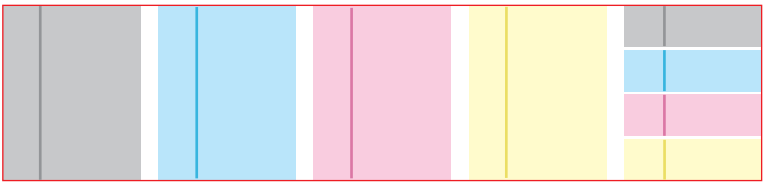


1. Print the Repeating Defects pages. From the front panel's **Printable Pages Menu**, select **Service Pages**, then select **Print Repeating Defects Pages**.
2. Swap the Print Cartridges. If the defect still appears in the same color, the problem is the developer. If the banding traveled, it is the print cartridge. All colors is a problem with the Accumulator Belt.
3. Replace the Accumulator Belt Assembly (RRP 35, on page 7-196).
4. If the banding frequency is high (.5 mm), replace the Laser Unit (RRP 38, on page 7-200).

## Random Missing Spots

There are small areas of the image that are extremely light or are missing entirely. These missing areas form spots that are localized to small areas of the page. The printer displays no error code. A small number of occasional missing spots is normal.

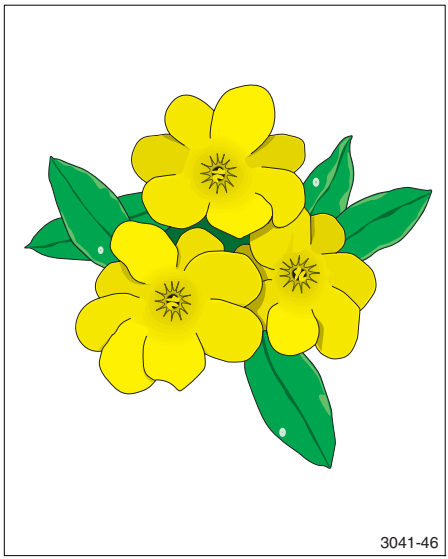


1. If a toner low message is displayed, replace the toner cartridge in question.
2. Ensure that the loaded media matches the front panel settings.
3. Run the Calibrate for Paper routine. From the front panel's **Support Menu**, select **Improve Print-Quality?**, then select **Calibrate for Paper Menu**.
4. Run the solid fill test pages. From the front panel's **Printable Pages Menu**, select **Service Pages**, then select **Print Solid Fill Pages**.
5. If the missing bands only occur in a single primary color, replace the Developer Housing Assembly (RRP 27, on page 7-185).

## Random Spotting

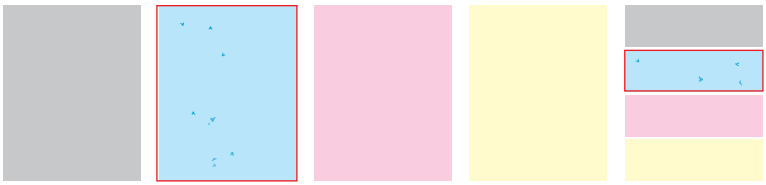


There are spots of toner randomly scattered across the page. The printer displays no error code.

## Single Color

1. Remove the toner cartridge of the suspect color and shake it.
2. Check the print cartridges.

## All Colors

1. Inspect the paper path.
2. Inspect the Accumulator Belt Cleaner and replace if necessary (RRP 36, on page 7-198).
3. Inspect the Bias Transfer Roller and replace if necessary (RRP 17, on page 7-172).
4. Inspect the Fuser to see whether paper is wrapped around the Fuser.
5. Replace the Fuser (RRP 19, on page 7-174).

## Repetitive Mark Appears on Each Print

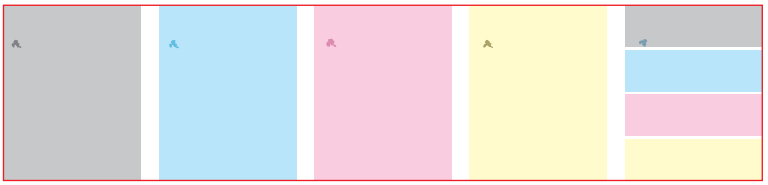

3041-48

An identical mark or image appears on each, or every other, printed image.

1. From the front panel's **Support Menu**, select **Improve Print-Quality?**, then select **Remove Print Smears**. This function passes several blank sheets of paper through the printer to clean the fuser rollers.
2. From the front panel's **Printable Pages Menu**, select **Service Pages**, then select **Repeating Defects** page. The Repeating Defects page contains rulers to help determine the source of the repeating defects.

| | |
|---|---|
| 84 mm (3.3 in.) | Fuser |
| 94 mm (3.7 in.) | Fuser (mark in all colors) or print cartridge (mark in single color) |
| 88 mm (3.5 in.) | Transfer roller (2nd bias) |
| 44 mm (1.7 in.) | Print cartridge |
| 28.3 mm (1.1 in.) | Developer housing roller |

## Background Contamination

There is toner contamination on all or most of the page. The contamination appears as a very light gray dusting. The printer displays no error code.

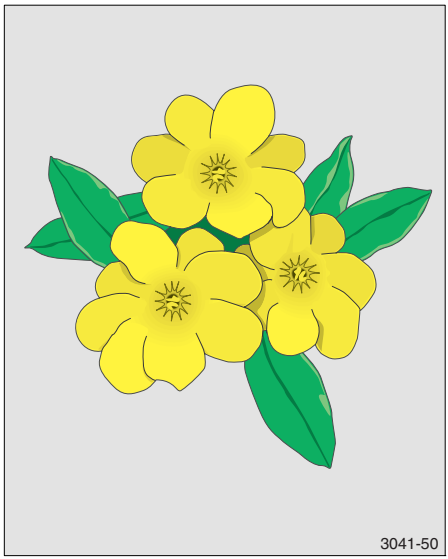


1. Ensure that the loaded media matches the front panel settings. In some cases, switching the paper type setting, for example from **Heavy Laser Paper** to **Thin Cover/Index**, may improve print-quality.
2. Run the Calibrate for Paper routine. From the front panel's **Support Menu**, select **Improve Print-Quality?**, then select **Calibrate for Paper Menu**.

**Note** Printing on some specialty papers, such as some glossy finish papers may show background contamination.

3. Inspect the print cartridges for contamination. Replace the print cartridges, if necessary.
4. If the Bias Transfer Roller or Belt Cleaner Assembly is near the end of its life, replace that part.
5. If the background contamination is a primary color (and that primary color is missing from the print), the high-voltage wire leading to that color's developer housing is grounded. Inspect the high-voltage wiring harnesses.

## Unfused Image or Image Easily Rubs Off of Page

The toner image is not completely fused to the paper. The image easily rubs off. The printer displays no error code.

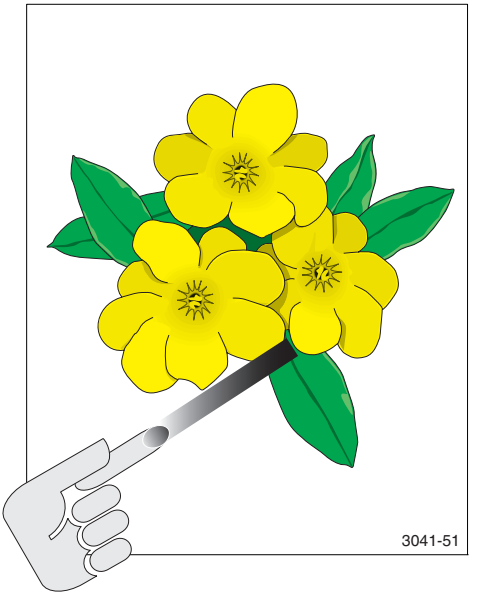


1. Make sure that the paper you are using is the correct type for the printer and is correctly loaded in the printer in the correct tray. From the front panel's **Printable Pages Menu**, select **Print Paper Tips Page**.
2. Make sure that the paper loaded in the tray matches the paper type selected on the printer's front panel.
3. If the problem continues, set the paper type in the front panel to the **next heaviest** type of paper than what you are using. Below is a list of paper types from the heaviest weight to the lightest:
   Thick Cover/Index
   Thin Cover/Index
   Heavy Laser Paper
   Laser Paper
4. Check for paper wrapped around or blocking the fuser roller. Inspect the fuser roller for damage. Replace the Fuser, if necessary (RRP 19, on page 7-174).

## Toner on Back of Print

There is toner on the back of the printed sheet of paper.

1. Clean the printer interior.
2. Inspect the paper that is loaded in the paper trays. Is the paper clean and free of toner?
3. Ensure that the loaded media matches the front panel settings. In some cases, switching the paper type setting, for example from **Heavy Laser Paper** to **Thin cover/Index**, may improve print-quality.
4. Clean and inspect the Fuser.
5. If the Bias Transfer Roller or Belt Cleaner Assembly is near the end of its life, replace that part.

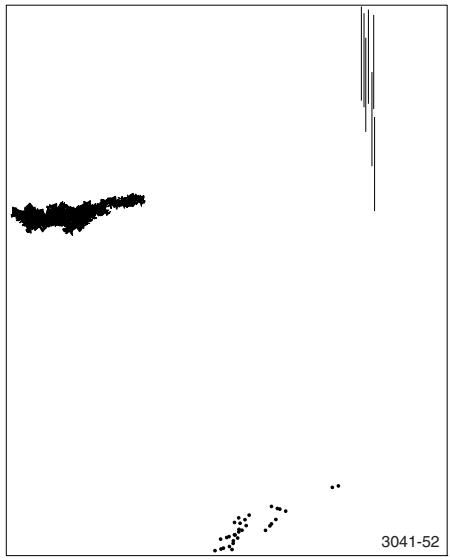

## Print is Mottled

The printed image has a mottled appearance.

1. Ensure that the paper is in good condition and appropriate for a laser printer.
2. Ensure that the loaded media matches the front panel settings. Also check the media selected in the printer driver.
3. For specialty papers, experiment with alternate paper type settings such as **Heavy Laser Paper**, Thick Cover/Index and others.
4. Run the Calibrate for Paper routine. From the front panel's **Support Menu**, select **Improve Print-Quality?,** then select **Calibrate for Paper Menu**.

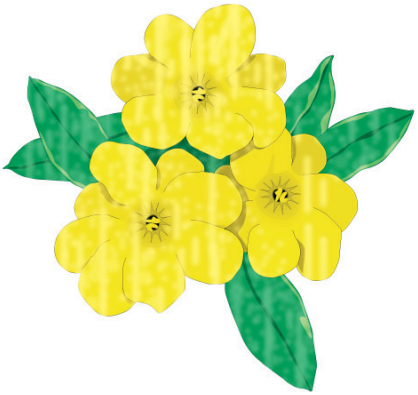

3041-53

**Note** Verify the settings; (be sure the setting is not at +4 value before running Calibrate for Paper. The MPT must be have the right setting to run calibrate for paper.

## Image Mis-registered on Paper

The image area is not centered on the page or the image is bleeding off of the page. The printer displays no error code.

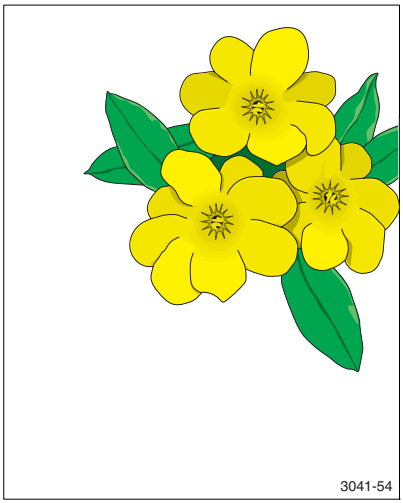


1. Run the configuration or **Startup Page** to verify the hard drive, application, and driver settings. From the front panel's **Printable Pages Menu**, select **Print Configuration Pages** or **Print Startup Page**.
2. Is the correct weight paper loaded in the tray or multi-purpose tray?
3. Ensure that the paper guides are set to the correct position for the paper loaded in the tray.
4. Try printing from the other trays. If the problem only occurs from one tray, clean the rollers in that tray.
5. Run the Calibrate for Margins routine. From the front panel's **Support Menu**, select **Improve Print-Quality?**, then select **Calibrate Margins Menu**.

## Residual Image or Ghosting

There are faint, ghostly images appearing on the page. The images may be either from a previous page or from the page currently being printed. The printer displays no error code.

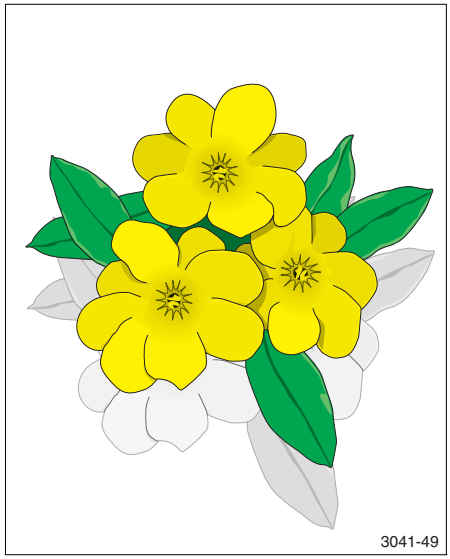


1. Make sure that the paper you are using is the correct type for the printer and is correctly loaded in the printer. From the front panel's **Printable Pages Menu**, select **Print Paper Tips Page**.
2. Make sure that the paper loaded in the tray matches the paper type selected on the printer's front panel.
3. If the problem continues, set the paper type in the front panel to the **next heaviest** type of paper than what you are using. Below is a list of paper types from the heaviest weight to the lightest:
   Thick Cover/Index
   Thin Cover/Index
   Heavy Laser Paper
   Laser Paper
4. If the colors are offset by only a small amount (10 mm maximum), then calibration of the laser may be needed. This is mis-registration, not ghosting. Go to Mis-registration on page 3-119.
5. If the ghost is offset by more than 84 mm, run the Print Smears routine to clean the fuser. From the front panel's **Support Menu**, select **Improve Print-Quality?**, then select **Remove Print Smears**.
6. Inspect and replace the Fuser if necessary (RRP 19, on page 7-174).

**Note** Some ghosting may appear on transparency film printing and is a limitation of the printer.

## Light Bands, Dark Bands, or Mottled Prints

An image void, dark bank or mottle in a primary CMYK color, or a visible area on the Developer Roller where toner is missing.

### Cause

Narrow image voids or a dark band in the process direction can be caused by contamination in the Developer Assembly. These contaminants have been attributed to vendor manufacturing processes or seal damage during disassembly and reassembly of the Developer. This contamination prevents Developer beads from flowing on to the Magnetic Roller correctly.

s7700-566

Mottled prints can be a result of bead carryout. Bead carryout is when most of the beads in the Developer are carried out of the Developer Assembly into the Waste Toner Cartridge.

s7700-567

### Procedure

1. Replace the Developer beads of the effected color(s). In almost all cases, replacing only the Developer beads (RRP 28, on page 7-186) will resolve the problems. It is not usually necessary to replace the Developer Assembly (P/N 116-1115-00).
2. Thoroughly clean the Developer Assembly before installing the new Developer bead mix. Rotate the Developer Drive backwards during cleaing to ensure no contamination remains under the Magnetic Roller. When reinstalling the cover in step #4 of (RRP 28, on page 7-186), be careful not to tear or dislodge any portion of the Foam Seal.

The engine firmware has several built-in diagnostic routines that perform various alignment and calibration procedures. The RegiCon 685 Adjustment procedures should be used whenever the technician removes or replaces the Laser Unit, the Print Cartridge Plate Assembly, the Mark-on-Belt Assembly, Developer Housing Assembly or where color registration is bad.

The printer is shipped aligned, registered and calibrated. The major disruption that can affect registration is when the NVRAM that contains the registration parameters is cleared, requiring that registration be redone. For information on resetting NVRAM see “Resetting NVRAM” on page 6-145.

## Internal Hard Drive

The Phaser 7700 Printer has a standard hard drive installed in every printer. The hard drive boots most of the firmware. There is a special file on the hard drive that stores the specific calibration values for various sensors and for the unique positioning of the laser in the printer.

- During manufacturing, the calibration values from the engine NVRAM have been written to the hard drive. The stored values can be written back to the engine NVRAM by performing a front panel “Reset Engine NVRAM Now” reset procedure.
- If "resetting" engine NVRAM does not restore correct color registration, the laser geometry has probably moved in the printer, and the registration procedure must be performed. After completing the registration process, perform the engine NVRAM "store" function to store the new engine NVRAM values to the hard drive.
- If the hard drive needs to be replaced, there is an engine NVRAM "store" function in the service diagnostics that enables the current engine NVRAM values to be written to the new hard drive.
- If the engine control board is replaced, the NVRAM values on the hard drive need to be restored to the new board with the engine NVRAM "reset" function.

# Registration Control (RegiCon) Adjustment Overview

The DC685 RegiCon tests are the means by which registration is accomplished. Registration means establishing the alignment of the four primary colors with regard to horizontal and vertical positioning, tilt or skew, length of lines and linearity. When the registration process is completed, all color planes are positioned properly.

**Note** For any registration procedure to succeed, the printer must print with no image defects. Verify by printing color solid fill pages, see “Print Color Test Prints” on page 9-289. To resolve a print image problem, see “Print Image Quality Problems” on page 3-108.

The printer registration process consists of the Belt Edge Learn, Coarse Skew Adjustment, Fine Skew Adjustment, In/Out Skew Adjustment, and Center Skew Adjustment, with each test reporting success. On failure of any of Skew Adjustment, the Coarse RegiCon Initialization must be performed.

## Coarse RegiCon Initialization

Coarse RegiCon Initialization is the procedure by which the printer aligns the magenta, yellow and black vertical and horizontal scan lines to the cyan reference scan line. Horizontal and vertical alignment ensures that the magenta, yellow and black lines are superimposed on Cyan.

Figure 1: Horizontal and Vertical Margins

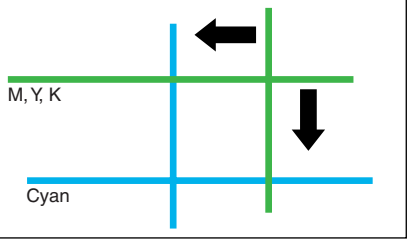


S7700-460

**Figure 4-1 Coarse RegiCon Initialization**

**Note** Cyan is the reference color to which all other colors are aligned.

## Coarse and Fine Skew Adjustments

Skew error is the mislevel of one or more of the four scan lines (C, M, Y & K). During the RegiCon #4 (Coarse) and RegiCon #1 (Fine) adjustments, the left side of each line is adjusted to be level with the right end.

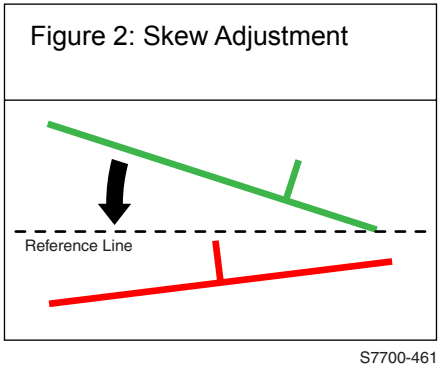


**Figure 4-2 Coarse and Fine Skew Adjustments**

## In/Out Skew Adjustment

The In/Out Skew Adjustment (Magnification) ensures that all four scan lines are the same length. During RegiCon #2, the printer measures, then adjusts the four scan lines to the proper length.

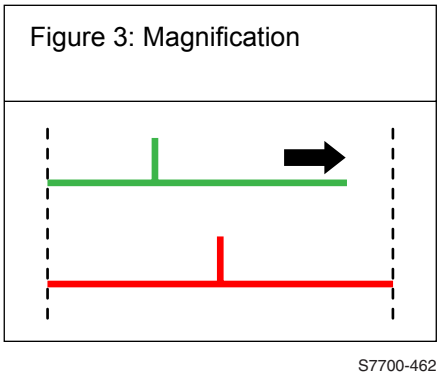


**Figure 4-3 In/Out Skew Adjustment**

## Center Skew Adjustment

The Center Skew Adjustment (Magnification Balance) adjusts the linearity of the scan lines. During RegiCon #3, the printer measures a specific midpoint of each scan line and adjusts it to a horizontal reference midpoint.

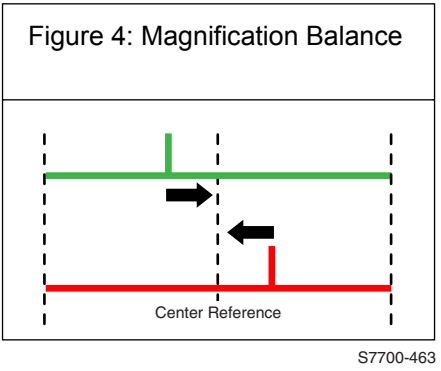


**Figure 4-4 Center Skew Adjustment**

# Processes of the RegiCon Adjustment

RegiCon is an engine resident algorithm that aligns the Magenta, Yellow, and Black lasers to the Cyan laser. Normally, the RegiCon procedure only needs to be performed if the Laser Unit has been replaced.

The RegiCon procedures are listed in the Adjustment/Calibration Menu of Service Diagnostics as RegiCon 685 Setup Cycle, and are split into several sections. The should be performed in the order listed, for optimal adjustments.

The test procedures should be performed in the following order. Each test must be successful before proceeding to the next. Refer to the RegiCon Flowchart on page 4-133.

## Check Print-quality

RegiCon will fail if there are any print-quality problems or if the MOB Sensor is not functioning correctly.

1. Select the Print Halftone pages from diagnostics and examine the page for any print-quality problems. Diagnose and repair any print-quality problems before running any RegiCon procedure.
2. Exame the shutter on the MOB Sensor and verify that it is not dislodged and moves freely without contacting any other parts.
3. If RegiCon appears to run correctly, but “No Results” is displayed, one of the Sensors on the MOB Sensor Assembly or the Laser could have failed, or the **usrstart_del** snippet needs to be downloaded to the hard drive.

**Note** The preferred method to correct any color registration issues is to follow the Reset Engine NVRAM procedure (page 6-150). This will write the stored, original, printer specific RegiCon values from the Hard Drive to Engine NVRAM. If this does not restore Proper Printer Color Registration, then proceed with RegiCon Adjustments.

## Preparation for RegiCon

1. Use the Front Panel connection setup menu to disable Netware.
2. Flip the Dip Switch #2 on the printer’s rear panel Down (this disables the Startup Page and enables the printer to write test results to the print engine NVRAM).
3. Disconnect any parallel or network cables from the rear panel of the printer.
4. If a Finisher is installed, disconnect the two cables to the printer and slide the Finisher away from the printer.

**Note** Remember to wait until the printer displays “Ready to Print,” plus 10 seconds, after each of the 685-x tests are run before power cycling printer to display results in diagnostics. Failure to wait long enough will result in a “No Results” message.

If any RegiCon routine appears to run correctly, but does not return any results:

1. You did not wait 10 seconds after the display indicated “Ready to Print” before re-booting the printer.
2. “Netware” was not disabled.
3. If the printer is running version 4.02 Postcript code and Netware is enabled, RegiCon will not initialize properly (typicaly will result in an error 80 condition). Disable Netware before performing any RegiCon procedure in diagnostics.
4. The Hard Disk Drive has the **MFGstartjob** snippet in the **sys.start** file. Download the **usrstart_del.ps** snippet to the printer. This snippet can be found on the Xerox website:
   - http://cpidserv.opbu.xerox.com/products/Phaser7700/Phaser7700Snippets.html
5. The MOB Sensor could be malfunctioning.

**Note** Remember to re-enable Netware after any RegiCon procedures have completed and new NVRAM values have been saved to the Hard Drive.

If you waited the required 10 seconds before re-booting and did not get any results, verify that the MOB Sensor is operating correctly by running the ADC Output check from the Adjustments/Calibration menu.

The test provides results that indicate if the ADC Sensor shutter is working and if the Sensors are working and reading the ADC patches. It also has an LD Illum warn =() and if a color (CMYK) is shown in the parentheses, the Laser has probably failed.

### Example of a Normal Result

**Note** Values denoted with a * are examples of results and will be different from printer to printer.

The ADC Output Check may need to be run several times to calibrate the Sensor as close to the target value as possible. If the prints remain dark after running the ADC Output Check and teh Fast Scan 8 tone prints do not look similar, replace the Engine Control Board (page 7-207).

The first two screens indicate that the test ran without errors:

Result=0 Stop Status=0 ADC Sensor Fail=0 ADC Shutter Fail=0

LD Illum War=None ADC Patch Fail=None VBCR Warn=None VBias Warn=None

The next four screens display values for each color. The target value is a set value and the Ave and Ideal numbers are the readings for the Sensor and may change.

Y:RADC Target=400 Ave RADC Trans=367 * (may be different and may change) Ideal LD Ill=251 * (may be different and may change) VBias=862 VBCR=0

M:RADC Target=400 Ave RADC Trans=450 * (may be different and may change) Ideal LD Illl=281 * (may be different and may change) VBias=862 VBCR=0

C:RADC Target=338 Ave RADC Trans=325 * (may be different and may change) Ideal LD Ill=293 * (may be different and may change) VBias=862 VBCR=0

K:RADC Target=380 Ave RADC Trans=397 * (may be different and may change) Ideal LD Ill=297 * (may be different and may change) VBias=862 VBCR=0

If the adjusting screws reach their maximum adjustment range either Clockwise or Counter Clockwise, center the adjusting position of the screws and restart the RegiCon procedure. The adjusting screws have 18 complete turns from fully CW to fully CCW. To adjust the screws to the center position, turn the screw to either limit and then turn it back 9 complete turns.

**#1 Fine Skew Adjustment Procedure** - this process examines the fine RegiCon image on the belt and reports the skew adjustments needed to be made (page 4-137).

**#2 is an IN/OUT Skew Procedure** - this process calibrates the end points of the scan line for magnification adjustment. There may be manual skew screw adjustments recommended by this test (page 4-138).

**#3 is a CENTER Skew procedure** - this process requires moving the Mark-On-Belt (MOB) sensor from the edge of the Accumulator Belt to an inner position of the belt (at approximately 1/3 the distance from the edge) to calibrate the CENTER components of the scan line for the magnification-balance adjustment (page 4-139).

# Registration Control Procedures

**Note** For the following procedures you must perform certain steps prior to, during and after the tests are run. The following information is vital to the process and must be followed in order for each procedure to function properly.

If the adjusting screws reach their maximum adjustment range either Clockwise or Counter Clockwise, center the adjusting position of the screws and restart the RegiCon procedure. The adjusting screws have 18 complete turns from fully CW to fully CCW. To adjust the screws to the center position, turn the screw to either limit and then turn it back 9 complete turns.

**Table 1 RegiCon Procedure**

| Step | Actions and Questions | Yes | No |
|---|---|---|---|
| 1 | Print the **Grid 1-Dot** print from Diagnostics.<br>Do all the colors align correctly? (This means that all the colored lines will appear merged when viewed with the naked eye. If viewed under magnification all colors will not overlap perfectly in all areas of the page.) | Complete. The color registration problem is not related to RegiCon. | Go to step #2. |
| 2 | Perform the **Reset Engine NVRAM** procedure (page 6-150) using the ORIGINAL Hard Drive from the printer. Reprint the Grid 1-Dot print from Diagnostics.<br>Do all the colors align correctly? | Go to step #3. | Perform the Coarse RegiCon Initialization procedure (page 4-140). Go to step #1. |

**Table 1 RegiCon Procedure (cont'd.)**

| Step | Actions and Questions | Yes | No |
|---|---|---|---|
| 3 | **Note:** Turn “Netware” Off before running any RegiCon procedures.<br>Perform the RegiCon #1 Fine Skew Adjustment (page 4-137). To view the results, you must re-enter **Service Diagnostics** by turning Off the printer, pressing the **Back** and **Info** buttons simultaneously, and switching the printer On.<br>Do the results indicate the test passed? | Scroll down using the Down arrow button to view the results and perform skew correction adjustments as indicated in the second panel data until less than +/-5 clicks are required for each color, then go to step #4.<br>Sometimes large numbers of clicks are displayed. If this occurs, center the adjusting position of the screws and restart the RegiCon procedure. The adjusting screws have 18 complete turns from fully CW to fully CCW. To adjust the screws to the center position, turn the screw to either limit and then turn it bak 9 complete turns, and re-test. | Go to step #8. |
| 4 | Perform the **RegiCon #2 In/Out Skew Adjustment** procedure (page 4-138). To view the results, you must re-enter **Service Diagnostics** by turning Off the printer, pressing the **Back** and **Info** buttons simultaneously, and switching the printer On.<br>Do the results indicate the test passed? | Scroll down using the Down arrow button to view the results and perform skew correction adjustments as indicated until less +/-5 clicks are required for each color, then go to step #5. | Go to step #8. |

**Table 1 RegiCon Procedure (cont'd.)**

| Step | Actions and Questions | Yes | No |
|---|---|---|---|
| 5 | Perform the **RegiCon #3 Center Skew Adjustment** procedure (page 4-139). To view the results, you must re-enter Service Diagnostics by turning Off the printer, pressing the **Back** and **Info** buttons simultaneously, and switching the printer On.<br>Do the results indicate the test passed?<br>**Note:** Be sure to move the MOB Sensor to its center position before running this test. | | Verify the MOB Sensor is correctly positioned in the center, then repeat the test.<br>If the Sensor was centered, diagnose and repair the MOB Sensor. |
| 6 | Print the **Grid 1-Dot** print from Diagnostics. Do all the colors align? | Complete: follow the Store Engine NVRAM procedure (page 6-150). Reconnect all cables and turn “Netware” back on before call completion. | Go to step #7. |
| 7 | Do the Print Halftone test prints exhibit any print quality defects? | Correct the print-quality defect and return to step #3. | Complete. |
| 8 | Perform the RegiCon #4 Coarse Skew Adjustment procedure (page 4-135).<br>Do the results indicate the test passed? | Perform the skew correction adjustments as indicated in the second panel data only until the test passes, then to back to step #3. | Perform the Coarse RegiCon Initialization procedure (page 4-140), then repeat step #8. |

# RegiCon Flowchart

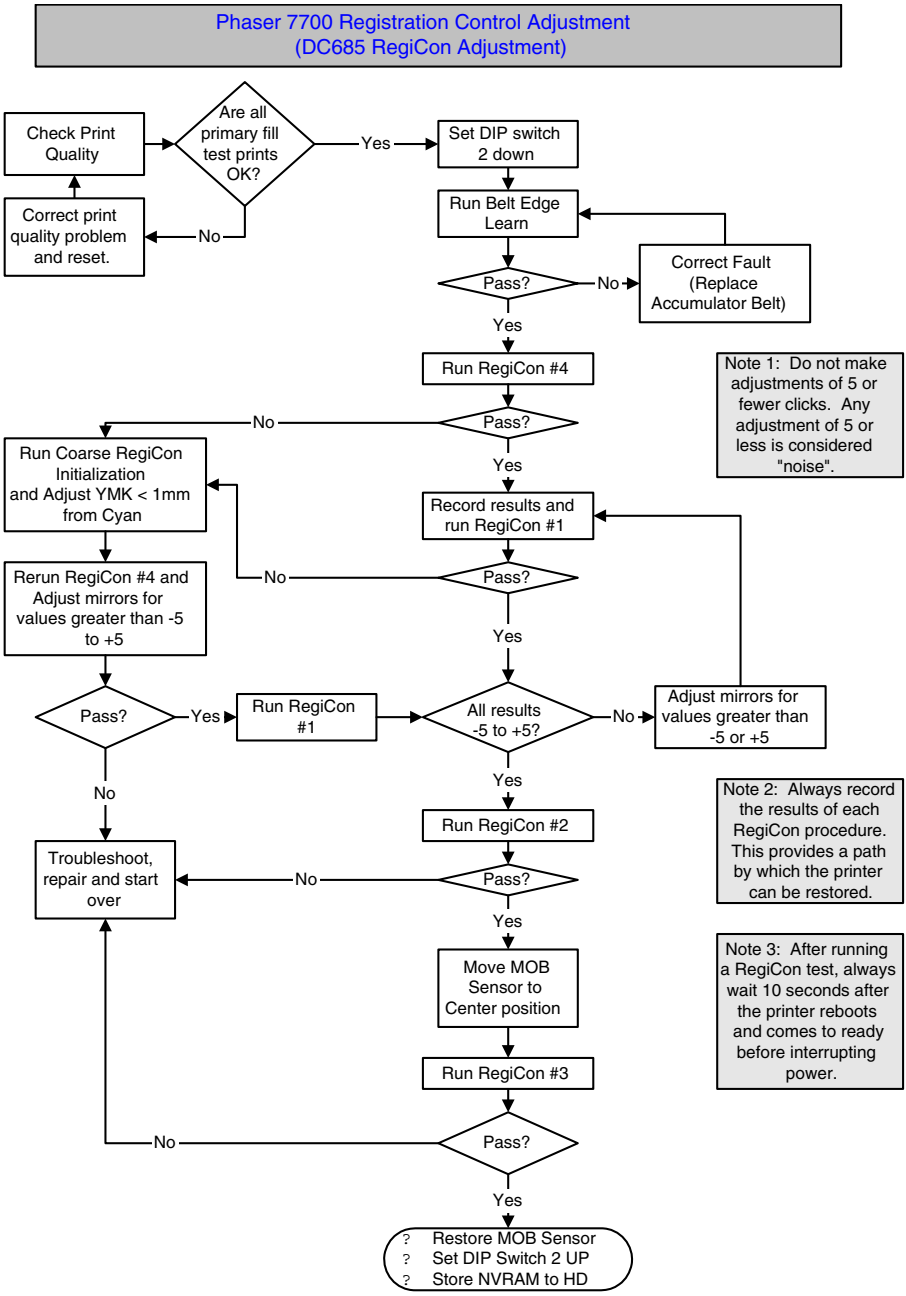


**Figure 4-5 RegiCon Flowchart**

## Step 1: Belt Edge Learn

Before doing skew adjustments, it is necessary to align the Accumulator Belt positioning system. A belt steering cam engages an arm on the Accumulator Belt cleaner to steer the belt. A belt edge sensor provides the real time feedback to steer the belt.

**Caution** *The Accumulator Belt must NOT be run without the Belt Cleaner in place. The belt WILL walk off the rollers and be permanently damaged.*

1. From the **Service Diagnostics Menu**, highlight the **Adjustments/Calibrations** menu and press **OK**.
2. Highlight **Belt Edge Learn** and press **OK**.
   The display now reads:

```
<Belt Edge Learn>
<Press back or cancel to abort>
```

The following result must be displayed after the test completes. Any other result means that the procedure failed.

```
<Belt Edge Learn>
Belt Edge Learn Result: OK
Belt Edge Learn Walk Control
<Press back or cancel to abort>
```

Press **Back** to return to the menu.

**If the Belt Edge Learn procedure fails:** The Accumulator Belt must be replaced.

## Step 2: RegiCon #4 Coarse Skew Adjustment

1. From the Service Diagnostics menu, highlight the **Adjustments/Calibration** menu and press **OK**.
2. Highlight **Regi Con 685 Setup Cycle** and press **OK**.
3. At the prompt: **Which DC685 procedure?**, select **#4 Coarse Skew Setup** and press **OK**.
4. At the prompt: **Do DC685-4 Coarse Cycle?**, highlight **Yes** and press **OK**. The front panel now displays: <PostScript will do 685-4>
5. The printer now reboots and runs the test. When the test is complete, wait for approximately 10 seconds after the motors turn Off and the display indicates “Ready To Print,” then cycle power and enter Service Diagnostics. (To display the results, you must re-enter Service Diagnostics Mode.)
6. Enter **Adjustments/Calibration --> Regi Con 685 Results Display** and press **OK**.
7. Wait until the test results are displayed as follows:

```
DC685-4 Passed
A Out Blocks: 0
B Out Blocks: 4
<Press Ok for more Data>
```

**Note** If the block counts are not the same number as presented here, the printer has a print-quality problem. Please refer to section “Streaks in Direction of Paper Travel” on page 3-111 to resolve the print-quality problems before proceeding further with RegiCon.

8. Press **OK** to see the second panel of data. If an adjustment is needed, perform the adjustments displayed on the front panel. Be sure to tap the screw that was adjusted with a heavy screwdriver to ensure that the adjustment remains true.

```
Skew Corr. Y: -7 clicks CCW
Skew Corr. M: 7 clicks CW
Skew Corr. C: -5 clicks CCW
Skew Corr. K: -12 clicks CCW
```

**Note** If the test procedure passes, no adjustments need be made. Continue directly to RegiCon #1 (Fine Skew Adjustments).

### If RegiCon Coarse Skew Fails

This indicates that the horizontal alignment is so far out of adjustment that a manual adjustment is required before the diagnostics test routines for fine skew can pass. Other possible problems; a Mark-On-Belt Sensor failure, Developer, Developer Bias Voltage, Print Cartridge, or Engine Control Board Failure.

- Perform the Coarse RegiCon Initialization procedure on page 4-140. This adjusts the horizontal alignment closer and allows RegiCon #4 to pass.
- After Coarse RegiCon Initialization is complete, perform RegiCon #4 (Coarse Skew Adjustment) again. Make the required adjustments.

**Note** Adjustments should be made only if the skew correction indicated is greater than +/- five clicks. A positive number indicates clockwise (CW) adjustment is needed. A negative number indicates a counter-clockwise (CCW) adjustment is needed.

Adjustment screws are located behind the Waste Cartridge, which must be removed for access. From left to right, the adjustment screws are: K, C, M, and Y.

## Step 3: RegiCon #1 Fine Skew Adjustment

This process uses sensors to examine the RegiCon image on the belt and report what skew adjustments need to be made. A side effect of this test is that horizontal and vertical alignments are automatically done (if the test passed).

The data output presents the skew screw adjustment values (some number of "clicks" of the screw, either CW or CCW direction). Values less than 5 or so are "noise" and should not need adjusted.

1. From the Service Diagnostics menu, highlight the **Adjustments/Calibration** menu and press **OK**.
2. Highlight **Regi Con 685 Setup Cycle** and press **OK**.
3. At the prompt: Which DC685 procedure?, highlight **#1 Fine Skew Setup** and press **OK**. The front panel now displays: <PostScript will do 685-1>
4. The printer now reboots and runs the test. Wait for approximately 10 seconds after the motors turn off and the display indicates “Ready To Print”, then cycle power and enter Service Diagnostics.
5. Enter **Adjustments/Calibration --> Regi Con 685 Results** and press **OK**.
6. Wait until the test results are displayed as follows:

```
DC685-1 Passed
A Out Blocks: 24
B Out Blocks: 4
<Press Ok for more Data>
```

**Note** If the block counts are not the same number as presented here, the printer has a print-quality problem. Please refer to section “Streaks in Direction of Paper Travel” on page 3-111 to resolve the print-quality problems before proceeding further with RegiCon.

7. Press **OK** to see the second panel data. If an adjustment is needed, adjust by the smounts displayed on the front panel. Be sure to tap the screw that was adjusted with a heavy screwdriver to ensure that the adjustment remains true.

```
Skew Corr. Y: -7 clicks CCW
Skew Corr. M: 7 clicks CW
Skew Corr. C: -5 clicks CCW
Skew Corr. K: -12 clicks CCW
```

**If the Belt Edge Learn procedure fails:** see “If RegiCon Coarse Skew Fails” on page 4-136.

## Step 4: RegiCon #2 In/Out Skew Adjustment

This test makes "magnification" adjustments for registration. Magnification is the length of the scan line for the four colors, so that each scan line for each color is the same length.

The data output can indicate PASSED, or READJUST (PASSED), or FAILED. If the result is READJUST, the indicated adjustment values for the skew adjustment should be done. It should not be necessary to rerun the test after making this adjustment.

1. From the Service Diagnostics menu, highlight **Adjustments/Calibration** menu and press **OK**.
2. Select **Regi Con 685 Setup Cycle** and press **OK**.
3. At the prompt: Which DC685 procedure?, select **#2 In/Out Skew Setup,** select **YES** and press **OK**. The front panel now displays: <PostScript will do 685-2>.
4. The printer now reboots and runs the test. Wait for approximately 10 seconds after the motors turn Off and the display indicates “Ready To Print,” then cycle power and enter Service Diagnostics.
5. Enter **Adjustments/Calibration --> Regi Con 685 Results** and press **OK**.
6. Wait until the test results are displayed as follows:

```
DC685-2 Passed
A Out Blocks: 24
B Out Blocks: 0
<Press Ok for more Data>
```

**Note** If the block counts are not the same number as presented here, the printer has a print-quality problem. Please refer to section “Streaks in Direction of Paper Travel” on page 3-111 to resolve the print-quality problems before proceeding further with RegiCon.

7. If the display indicates <DC685-2 READJUST (Passed)>, press **OK** to see the second panel data. If an adjustment is needed, adjust by the amounts displayed on the front panel. Be sure to tap the screw that was adjusted with a heavy screwdriver to ensure the adjustment remains true.

```
Skew Corr. Y: -7 clicks CCW
Skew Corr. M: 7 clicks CW
Skew Corr. C: -5 clicks CCW
Skew Corr. K: -12 clicks CCW
```

### When DC685-1 or DC685-2 Fails

The horizontal alignment error is excessive and a manual adjustment is required before the diagnostics test routines for fine skew can pass. For details of the Coarse RegiCon Init procedure, see “Coarse RegiCon Initialization” on page 4-140.

## Step 5: RegiCon #3 Center Skew Adjustment

This test adjusts magnification balance. There are no manual adjustments required after completing the test.

**Note** To perform this test, move the Mark-On-Belt sensor to the CENTER position. After the test has been run, the Mark-On-Belt must be moved back to the home position.

1. Remove the Waste Cartridge.
2. Remove the screw that holds the Mark-On-Belt (MOB) sensor to the front of the printer.
3. Using the laser mirror cleaning tool backward, push the sensor all the way to the CENTER position (until it hits the stop).
4. Reinstall the Waste Cartridge.
5. Close the door and run the test.
6. From the Service Diagnostics menu, highlight **Adjustments/Calibration** menu and press **OK**.
7. Select **Regi Con 685 Setup Cycle** and press **OK**.
8. At the prompt: Which DC685 procedure?, select **RegiCon #3 Center Skew Setup** and press **OK**. The front panel now displays: <PostScript will do 685-3>.
9. The printer now reboots and runs the test. Wait for approximately 10 seconds after the motors turn off then cycle power and enter Service Diagnostics. (To display the results or continue you must re-enter Service Diagnostics Mode).
10. Enter **Adjustments/Calibration --> Regi Con 685 Results** and press **OK**.
11. Wait until the test results are displayed as follows:

```
DC685-3 Passed
A Center Blocks: 24
B Center Blocks: 4
<Press Ok for more Data>
```

**Note** If the block counts are not the same number as presented here, the printer has a print-quality problem. Please refer to section “Streaks in Direction of Paper Travel” on page 3-111 to resolve the print-quality problems before proceeding further with RegiCon.

12. Using the back of the Laser Cleaning Tool, hook the loop of the MOB Sensor (just pushed back in step 3 above) and pull it all the way to the front. Continue holding the MOB Sensor in position while reinserting the securing screw (removed in step 2 above) and tightening.

### When DC685-3 Fails

This is probably due to the Mark-On-Belt sensor not being positioned properly (assuming that RegiCon 1 and 2 tests have already passed). The sensor has a "wedge-fit" when in position for the number 3 "center" position. If the Mark-On-Belt sensor not correctly positiond, it can cause the test to fail. Recheck the MOB sensor position and run the test again.

# Coarse RegiCon Initialization

The Coarse RegiCon Initialization procedure is needed when either RegiCon 1 or 4 fail.

If any one of the above conditions exist, perform a manual adjustment of the horizontal alignment.

1. Run the **Belt Edge Learn** test (page 4-134).
2. From the **Adjustments/Calibrations** menu, select **Coarse RegiCon Init** test. After some NVRAM values are read, the test asks **Set Factory Defaults? Yes/No**, then select **Yes.** This sets the horizontal and vertical alignment to centered values. At this time, it should not be necessary to reset the magnification or magnification balance values, so select **No** to **Reset Mag/Bal Values? Yes/No**.

**Note** In all the following steps, Cyan is the reference line and cannot be adjusted, so you need to adjust all the other lines towards the Cyan line.

3. From the Built-in Test Prints menu, select **Print Grid 1-Dot**. This print shows the relative error between the CMYK scan lines. Always indicate which edge of the print comes out of the printer first to be certain which way is Left/Right or Up/Down (see Figure 4-6 “Grid 1-Dot Pattern Orientation for A-size Paper”). Measure the distance (in millimeters) between the vertical lines, with the Cyan line being the reference line.
   - It is best if the default paper tray contains A-size paper.

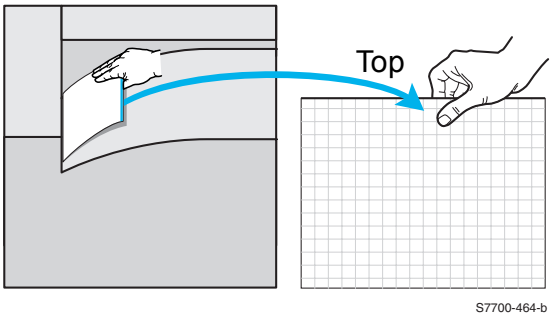


**Figure 4-6 Grid 1-Dot Pattern Orientation for A-size Paper**

- Note the leading edge of the paper when removing the test print from the tray. Use a pen or pencil to note the leading edge as the “**TOP**” of the print “Grid 1-Dot pattern annotations” on page 4-141. With “**TOP**” up, note the direction of scan from left to right as the “**FAST** ” direction. The direction from the bottom of the print to the top is referred to as the “**SLOW**” direction.

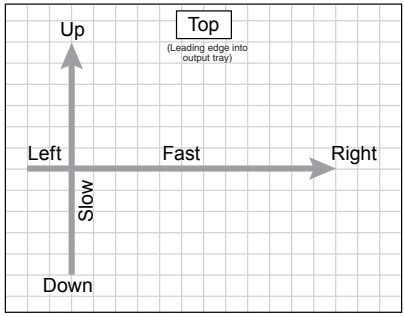


**Figure 4-7 Grid 1-Dot pattern annotations**

- Notice which vertical line color(s) on the print needs to be moved right or left to line up as closely as possible with the cyan color line.
- Measure how much each line needs to move (in millimeters) and whether it must be moved left or right.

**Note** Cyan is the reference color and does not move. Make the adjustments of M, Y, and K toward Cyan.

4. From the **Adjustment/Calibrations** menu, select **Coarse RegiCon Init** test. This time answer **No** to the **Set Factory Defaults? Yes/No**, but answer **Yes** to the **Do you want to adjust NVRAM? Yes/No** question. Answer **No** to **Set Skew Error threshold? Yes/No**. Answer **Fast** to the **Which scan direction? Fast/Slow**.
5. Select which color (of YMK) to adjust. Select how many millimeters (1-5) to adjust. Select which direction (**Left/Right**). The next screen asks for confirmation: {**Adjust <color> by <n> mm? Yes/No**}, select **Yes**.
6. Repeat steps 4 and 5 for the other colors. You reprint the Grid 1-Dot pattern, as outlined in step 3, or go to the **Adjustments/Calibrations menu: RegiCon 685 Setup Cycle test**. If the #1 test fails, print the Grid 1-Dot page to see if the vertical lines are all clustered within 1 mm of the Cyan line. If not, repeat. It may be necessary to closely inspect the Color Solid Fill Prints to determine if the image quality is acceptable.

# ATC Sensor Setup

The Automatic Toner Calibration (ATC) sensor measures the amount of toner in each developer. These sensors have an intrinsic gain and output value are stored in printer NVRAM. New values must be entered when a new Developer Housing Housing is installed. Incorrect values have color balance effects.

On the side of each new Developer Housing Assembly is a small white tag with a bold-faced three-digit number printed near the bottom. The first digit is always "0." The other digits range between 0 and 99. There is a tear off section of the tag that should be placed on the chassis somewhere in plain view when the front door is open.

To set the new values:

1. Enter Service Diagnostics.
2. Highlight **Adjustments/Calibrations** menu and press **OK**.
3. Highlight **ATC Sensor Setup Test** and press **OK**.
4. Note the current values for the tag numbers on the front panel display. They should correspond to the tag numbers of the developers actually installed.
5. Select the color of the developer you installed.
6. Enter the tag number. You can only modify the lower two digits. Use the **Back** and **Info** keys to select which digit you want to change. Use the **Up** and **Down** keys to actually modify the digit.
7. Press **OK** to enter the data in engine NVRAM.
8. Press any button to abort the test.

## Additional Information

For information on the following topics, see “Service Diagnostics Test Menu Functions” on page 2-36.

- TRC Adjust - For Engineering Use Only
- ADC Output Check - Check ADC Sensor Fail = 0
- Tone Up/Down - Check ATC Sensor Fail = None
- Laser Power Check
- PWM Mapping - For Engineering Use Only

# Cleaning and Maintenance

## Service Preventive Maintenance Procedure

Perform the following procedures whenever you check, service, or repair a printer, Cleaning the printer, as outlined in the following steps, assures proper operation of the printer and reduces the probability of having to service the printer in the future.

The frequency of use and the type of paper a customer prints on determines how critical cleaning the machine is. You should thoroughly inspect and clean these printers.

## Recommended Tools

- Toner vacuum cleaner
- Clean water
- Clean, dry, lint-free cloth
- Black light protective bag

## Cleaning

**Caution** Never apply alcohol to the fuser rollers.

**Note** Never use a damp cloth to clean up toner.

1. Turn Off the printer.
2. Remove the waste cartridge carefully, keeping the waste cartridge from tipping.
3. Vacuum out any loose toner from the interior of the printer with a Type II toner vacuum only.
4. Clean the laser window with the cleaning wand, following the details labelled in the inside of the front door.
5. Open left side door and clean up any toner inside.
6. Remove and clean the paper trays.
7. Clean pick rollers with a dry, lint-free cloth.

# Resetting NVRAM

Resetting NVRAM returns all the image processor's NVRAM-stored parameters to their factory defaults except the print counts and the Adobe firmware serial number. You can reset both the PostScript and engine NVRAM the PostScript Menu or the Service Diagnostics Menu.

## PostScript NVRAM Resets

### Restore Factory Settings (color)

You can reset settings for density and color balance to the factory-default values.

1. From the **Main Menu**, highlight **Support** and press **OK**.
2. Highlight **Improve Print-Quality?** and press **OK**.
3. Highlight **Calibrate Colors Menu** and press **OK**.
4. Highlight **Restore Factory Settings?** and press **OK**.
5. Highlight **Restore Factory Settings NOW** and press the **OK** to reset the color settings to factory defaults.

### Restore Previous Settings (color)

You can return the color settings to the ones that existed before you saved the last color balance adjustments.

1. From the **Main Menu**, highlight **Support** and press **OK**.
2. Highlight **Improve Print-Quality?** and press **OK**.
3. Highlight **Calibrate Colors Menu** and press **OK**.
4. Highlight **Restore Factory Settings?** and press **OK**.
5. Highlight **Restore Previous Settings** and press **OK** to restore the previous color settings.

## Restore Factory Settings (margins)

You can reset margin settings to the factory-default values.

**Caution** *Use caution when resetting your margins to the factory-default settings. Changing these settings back to factory defaults may not be the last-saved settings if you have previously calibrated your margins.*

1. From the **Main Menu**, highlight **Support** and press **OK**.
2. Highlight **Improve print-quality** and press **OK**.
3. Highlight **Calibrate Colors Menu** and press **OK**.
4. Highlight **Restore Factory Settings** and press **OK**.
5. Highlight **Restore Factory Settings** and press **OK** to reset the margin settings.

## Reset Calibrations (color, margins, paper)

**Note** Resetting calibrations resets the color, margin, and paper settings.

1. From the **Main Menu**, highlight **Support** and press **OK**.
2. Highlight **Improve print-quality** and press **OK**.
3. Highlight **Reset Calibrations** and press **OK**.
4. Highlight **Reset Calibrations NOW** and press **OK** to reset the color, margins and paper (transfer) settings to factory defaults.

## Resetting All Printer Default Settings (NVRAM)

Resetting the NVRAM resets all printer values including network, printer setup, job defaults, color, margin, and paper calibrations.

1. From the **Main Menu**, highlight **Support** and press **OK**.
2. Highlight **Service Tools Menu** and press **OK**.
3. **Reset NVRAM** is displayed, press **OK**.
4. Highlight **Reset NVRAM and Reset Printer NOW** and press **OK** to reset all the settings to default.

## Resetting Engine NVRAM

Resetting (restoring) the engine NVRAM values resets the RegiCon color, margin and A4/B5 selection paper settings to default. This is NOT the diagnostics reset. To restore data stored on the hard drive to NVRAM, see “Reset Engine NVRAM” on page 6-150.

1. From the **Main Menu**, highlight **Support** and press **OK**.
2. Highlight **Service Tools Menu** and press **OK**.
3. **Reset NVRAM** is displayed.
4. Highlight **Reset Engine NVRAM NOW** and press **OK**.

## Resetting Job Defaults

Resetting the job defaults resets the paper source, paper destination, job offset, stapling options, print-quality mode, 2-sided printing, image smoothing and tekcolor corrections to their default values.

1. From the **Main Menu**, highlight **Print Setup Menu** and press **OK**.
2. Highlight **Job Defaults Menu** and press **OK**.
3. **Reset Job Defaults** is displayed, press **OK**.
4. Highlight **Reset Job Defaults NOW** and press **OK** to reset the job defaults.

## Resetting Network Setup Values to Default

Resetting the network setup values resets the TCP/IP address, TCP/IP address menu settings (gateway, broadcast, etc.), CentreWare IS, EtherTalk, Netware, set IPX frame type, IPP and Ethernet speed to their default values.

1. From the **Main Menu**, highlight **Network Setup Menu** and press **OK**.
2. Highlight **Reset Network Setup** and press **OK**.
3. **Reset Network Setup NOW** is displayed, press **OK**.

## Resetting Accumulator Belt Life

Resetting the Accumulator Belt life is to be performed only if the Accumulator Belt Assembly was defective and or the assembly is replaced before an end-of-life or near end-of-life message. Do not to extend the life of the assembly. Doing so may cause premature failure of other internal printer components.

The printer prompts the user to reset the life counts if the assembly is replaced after receiving a Replace Accumulator Belt Assembly or Replace Accumulator Belt Assembly Soon message.

1. From the **Main Menu**, highlight **Supplies Info Menu** and press **OK**.
2. Highlight **Reset Accumulator Belt Life** and press **OK**.
3. Reset **Accumulator Belt Life NOW** is displayed, press **OK** to reset the Accumulator Belt life.

## Resetting Belt Cleaner Assembly Life

Resetting the belt cleaner life is to be performed only if the Belt Cleaner Assembly was defective and or the assembly is replaced before an end-of-life or near end-of- life message. Do not to extend the life of the assembly. Doing so may cause premature failure of other internal printer components.

The printer prompts the user to reset the life counts if the assembly is replaced after receiving a Replace Belt Cleaner Assembly or Replace Belt Cleaner Assembly Soon message.

1. From the **Main Menu**, highlight **Supplies Info Menu** and press **OK**.
2. Highlight **Reset Belt Cleaner Life** and press **OK**.
3. Reset **Cleaner Life NOW** is displayed, press **OK** to reset the Accumulator Belt life.

## Resetting Transfer Roller Life

Resetting the transfer roller life is to be performed only if the Transfer Roller Assembly was defective and or the assembly is replaced before an end-of-life or near end-of-life message. Do not to extend the life of the assembly. Doing so may cause premature failure of other internal printer components.

The printer prompts the user to reset the life counts if the assembly is replaced after receiving a Replace Transfer Roller or Replace Transfer Roller Soon message.

1. From the **Main Menu**, highlight **Supplies Info Menu** and press **OK**.
2. Highlight **Reset Transfer Roller Life** and press **OK**.
3. Reset **Transfer Roller Life NOW** is displayed, press **OK** to reset the Accumulator Belt life.

# Service Diagnostics NVRAM Resets

## PostScript NVRAM Reset

Resetting the printer setup values resets the job defaults, front panel language, Intelligent Ready, multi-purpose setup, tray 1 - 4 setup, Startup Page, front panel intensity, front panel contrast, postscript error information and ENERGY STAR™ timeout to their default values.

1. Enter **Service Diagnostics**.
2. Highlight **NVRAM Access** and press **OK**.
3. Highlight **PostScript NVRAM Reset** and press **OK**.
4. Select the specific entry desired and press **OK**.

The printer now exits Service Diagnostics and reboots. While booting, NVRAM is reset.

## Clear Tech Rep Faults

The following printer faults can occur during normal operation, and the normal procedure is to isolate and repair the problem. However, with these particular faults, an additional step is required. A value has been written in the engine NVRAM that requires clearing before the printer can be used. Some faults require three occurrences before the fault is generated.

**Note** To clear a Tech Rep Fault, you must disconnect the Finisher option.

The following functions generate a Tech Rep Fault:

- Belt Home Too long - Error: 30
- ATC-YMCK Sensor Fail - Errors: 12, 13, 14, 15
- ADC Sensor Fail Errors - Engineering use only
- Print Cart. YMCK Type Mismatch - Engineering use only
- Fuser Main/Sub Lamp Temp Too High - Errors: 40, 44

1. Enter **Service Diagnostics.**
2. Highlight **NVRAM Access** and press **OK**.
3. Highlight **Clear Tech Rep Faults** and press **OK**.
4. Highlight the **Link Code to be reset** and press **OK**.

## Reset CRU Life Counters

For Engineering use only.

## Reset Engine NVRAM

Reset NVRAM allows PostScript to write stored data from the hard drive to engine NVRAM. You must restore engine NVRAM after replacing the Engine Control Board.

1. Enter **Service Diagnostics.** Verify switch #2 is Down.
2. Highlight **NVRAM Access** and press **OK**.
3. Highlight **Reset Engine NVRAM** and press **OK**.

## Store Engine NVRAM

This function reads values from the engine NVRAM and writes values to the hard drive. It overwrites NVRAM values stored on the hard drive.

You must store values to the hard drive before any of the following parts are replaced or procedures performed.

- Engine Control Board
- Internal Hard Drive
- Laser Unit movement
- Calibrate for margins procedure
- Developer replacement
- Print Cartridge Cover Plate movement
- Mark-On-Belt Sensor replacement

You must store engine NVRAM values to the Internal Hard Drive after replacement of the Internal Hard Drive.

1. Enter **Service Diagnostics.** Verify switch #2 is Down.
2. Highlight **NVRAM Access** and press **OK**.
3. Highlight **Store Engine NVRAM** and press **OK**.

# Removal and Replacement Procedures

This topic illustrates how to remove and replace printer Field Replaceable Units (FRUs). For more detailed removal/replacement procedures, refer to the Phaser 7700 Color Laser Printer Service & Support Resources CD-ROM. For specific assemblies and parts, refer to the FRU Parts List on page 8-235.

This section contains the removal and replacement procedures for selected parts of the printer. Not all Replacement Procedures are included in this Quick Reference Guide. In most cases, to reinstall a part, simply reverse the Removal Procedure shown. In some instances, the Replacement Procedure is included, because it may contain special steps.

This section covers the print engine and Auxiliary Feeders only. For Removal and Replacement of the Finisher, see the Phaser 7700 Light Finisher on page 11-323.

RRP 1 Rear Cover Assembly . . . . . 7-154
RRP 2 Right Side Cover Assembly . . . . . 7-155
RRP 3 Top Cover Assembly . . . . . 7-156
RRP 4 Front Panel Assembly . . . . . 7-157
RRP 5 Rear Cover, Top Rear Power Switch Cover and LH Rear Mid Cover. . . . . 7-158
RRP 6 Left-Hand Lower Cover Assembly . . . . . 7-160
RRP 7 Front Cover Assembly . . . . . 7-161
RRP 8 Fuser Front Cover . . . . . 7-162
RRP 9 Rear Shield . . . . . 7-163
RRP 11 24 VDC Power Supply Shield. . . . . 7-164
RRP 10 Rear Shield Bracket . . . . . 7-165
RRP 12 Multi-Purpose Tray (MPT) Assembly. . . . . 7-166
RRP 13 Multi-Purpose Tray Paper Pick Rollers . . . . . 7-167
RRP 14 Left-Hand Cover Assembly (Left-Hand Door) . . . . . 7-168
RRP 15 Duplex Chute . . . . . 7-170
RRP 16 Duplex Unit Assembly . . . . . 7-171
RRP 17 Transfer Roller Assembly (2nd BTR) . . . . . 7-172
RRP 18 Duplex Transport Assembly. . . . . 7-173
RRP 19 Fuser Unit . . . . . 7-174
RRP 20 Registration Transport Assembly. . . . . 7-175
RRP 21 Shutter Solenoid Assembly . . . . . 7-176
RRP 22 Tray 1 Feeder Assembly and Paper Lift Motor . . . . . 7-177
RRP 23 Waste Cartridge Sensor Holder . . . . . 7-178
RRP 24 Print Cartridge Plate Cover . . . . . 7-179
RRP 25 Dispense Assembly . . . . . 7-180
RRP 26 Print Cartridge Plate Assembly . . . . . 7-182
RRP 27 Developer Housing Assembly . . . . . 7-185
RRP 28 New Developer Housing Assembly Charging. . . . . 7-186
RRP 29 Toner Dispense Motor Assembly. . . . . 7-188
RRP 30 Steering Drive Assembly . . . . . 7-189
RRP 31 Waste Toner Agitator Motor Assembly . . . . . 7-190
RRP 32 Mark-On-Belt (MOB) Sensor . . . . . 7-191
RRP 33 Exit Transport Assembly . . . . . 7-192
RRP 34 Fuser Fan Assembly. . . . . 7-195
RRP 35 Accumulator Belt Assembly. . . . . 7-196
RRP 36 Belt Cleaner Assembly. . . . . 7-198
RRP 37 Waste Auger Assembly . . . . . 7-199
RRP 38 Laser Unit . . . . . 7-200
RRP 39 Image Processor Board Assembly. . . . . 7-202
RRP 40 Internal Hard Drive . . . . . 7-203
RRP 41 Electrical Chassis (Card Cage) Assembly. . . . . 7-204

RRP 42 Engine Control Board . . . . . .7-206
RRP 43 Engine Control Interface Board . . . . . .7-207
RRP 44 T1 and T3 High-voltage Power Supplies . . . . . .7-208
RRP 45 3.3 VDC and 5 VDC Low-Voltage Power Supplies and Bracket . . . . . .7-210
RRP 46 LD Power Relay . . . . . .7-211
RRP 47 +24 VDC Low-voltage Power Supply, Fan and Bracket. . . . . .7-212
RRP 48 T2 High-Voltage Power Supply . . . . . .7-213
RRP 49 Chassis AC Power Assembly . . . . . .7-214
RRP 50 Main Drive Assembly . . . . . .7-215
RRP 51 Accumulator Belt Drive Assembly . . . . . .7-217
RRP 52 Developer Drive Assembly . . . . . .7-218
RRP 53 Print Cartridge Drive Assembly . . . . . .7-219
RRP 54 Tray 1 Paper-Select Switches . . . . . .7-220
RRP 55 Main Lever Assembly Right and Left-Hand Jacks . . . . . .7-221
RRP 56 Auxiliary Feeder Covers . . . . . .7-225
RRP 57 Auxiliary Feeder Cover Assembly . . . . . .7-226
RRP 58 High-Capacity Feeder (HCF) Tray 3 . . . . . .7-227
RRP 59 High-Capacity Feeder (HCF) Tray 4 and Paper Transport . . . . . .7-228
RRP 60 Auxiliary Feeder Control Boards . . . . . .7-229
RRP 61 Auxiliary Feeders Motor Assemblies . . . . . .7-230
RRP 62 Auxiliary Feeder Paper-Select Switches . . . . . .7-231
RRP 63 Auxiliary Feeder Paper Feed Motor Assembly . . . . . .7-232
RRP 64 Bracket Assembly, Left-Hand and Right-Hand Gear (HCF) . . . . . .7-233

# RRP 1 Rear Cover Assembly

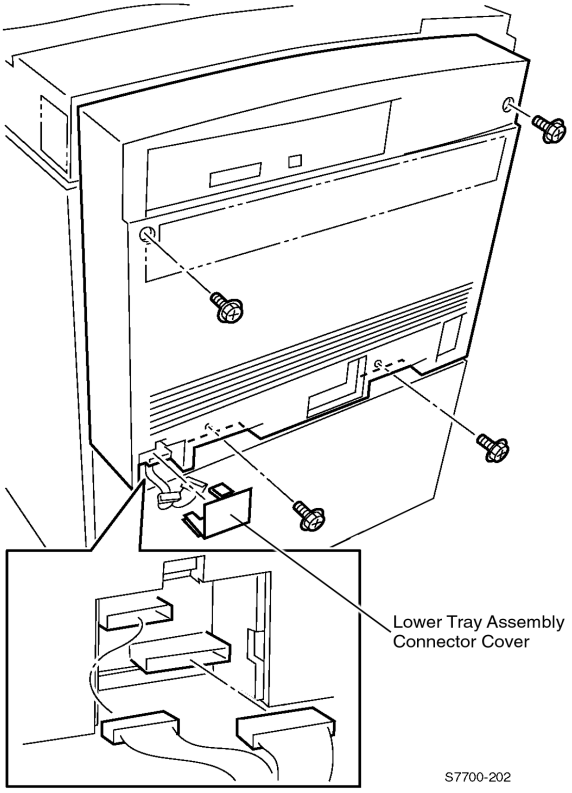


**Figure 7-1 Rear Cover Assembly**

## Removal

**Warning** Turn Off the printer and disconnect the power cord.

1. If an Auxiliary Feeder has been installed, open the Auxiliary Feeder Connection Cover and disconnect the Auxiliary Feeder wiring harness.
2. Remove the four screws that secure the Rear Cover Assembly to the printer.
3. Pull the top edge of the Rear Cover Assembly about one inch away from the printer, and push down to release the cover.

# RRP 2 Right Side Cover Assembly

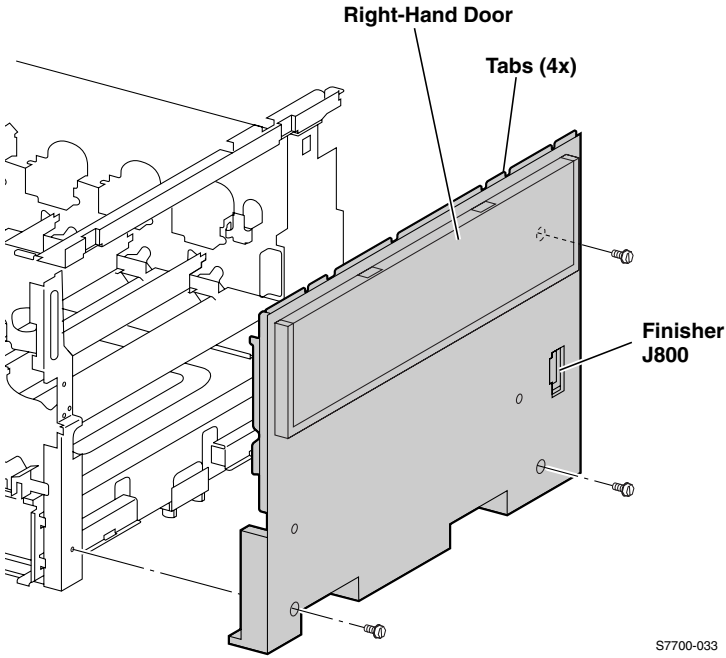


**Figure 7-2 Right Side Cover Assembly**

## Removal

1. Open the Front Cover.
2. Remove the three screws that secure the Right Side Cover to the printer. One screw is located behind the Right-Hand door.
3. Lightly press downward to release the four hidden tabs that are behind the right side cover, then pull the cover away from the printer.

# RRP 3 Top Cover Assembly

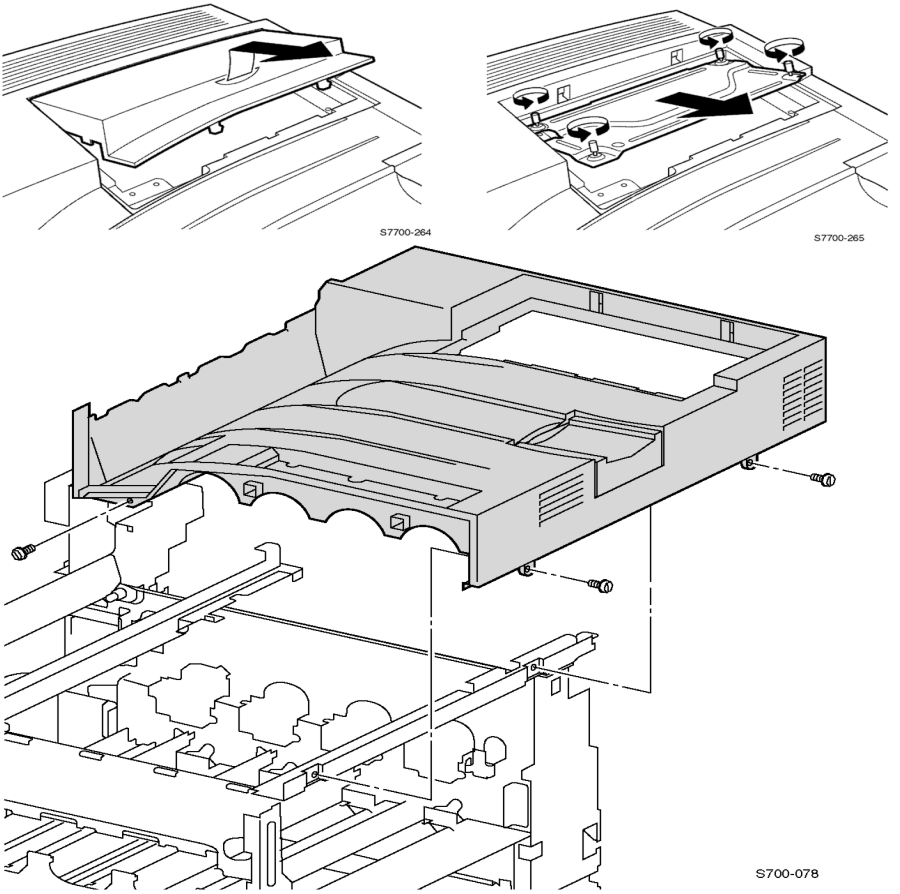


**Figure 7-3 Top Cover Assembly**

## Removal

1. Remove the Right Side Cover Assembly (RRP 2, on page 7-155).
2. Remove the two screws visible on the right side of the Top Cover.
3. Open the Front Cover and remove the front screw holding the Top Cover.
4. Open the Image Processor Board Cover to gain access to the 4 thumb screws that secure the Image Processor Board metal cover.
5. Remove the Image Processor Board metal cover.
6. Disconnect the front panel cable from the Relay Board P564.
7. Remove the Top Cover.

# RRP 4 Front Panel Assembly

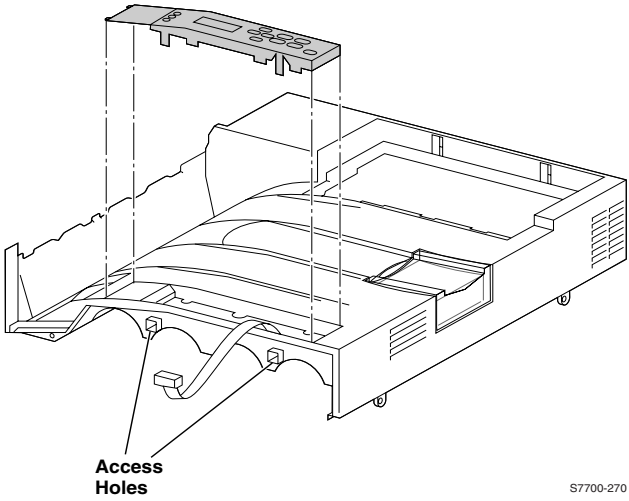


**Figure 7-4 Control Panel Assembly**

## Removal

**Warning** Turn Off the printer and disconnect the power cord.

1. Open the Front Door.
2. Release the Front Panel Assembly by inserting a screwdriver or key into the two access holes indicated in the illustration and push the tangs inward to release.
3. Lift up the panel slightly and unplug the cable connected to the Front Panel.
4. Release the two tabs on the left-hand end of the Front Panel Assembly and remove.

# RRP 5 Rear Cover, Top Rear Power Switch Cover and LH Rear Mid Cover

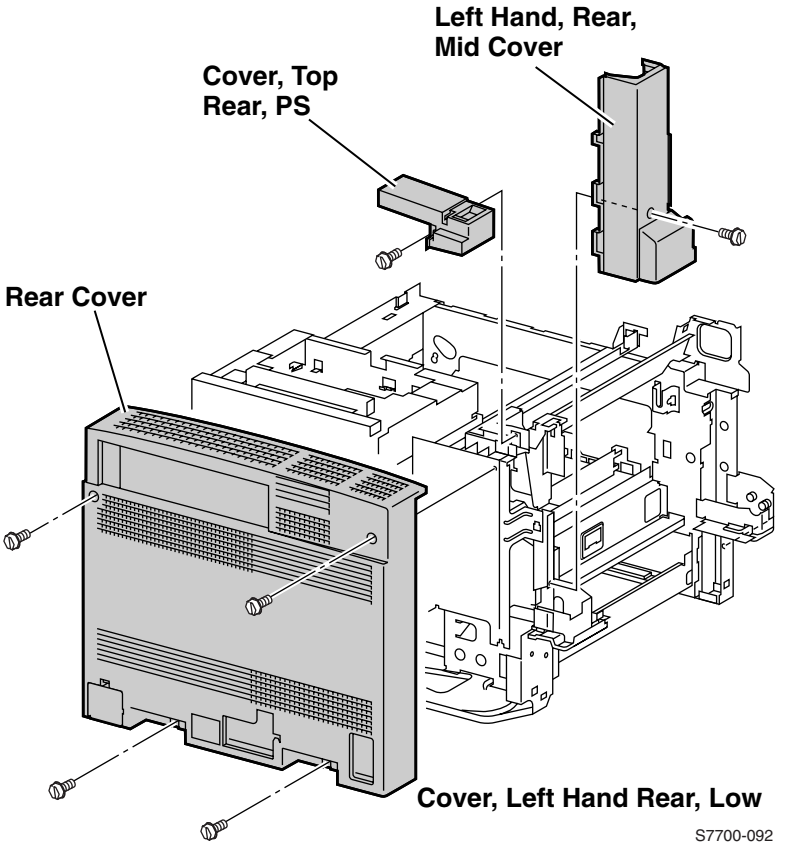


**Figure 7-5 Top Rear Power Switch Cover and Left-Hand Rear Mid Cover**

## Removal

### Top Rear Power Switch Cover

**Warning** Turn Off the printer and disconnect the power cord.

1. Remove the Rear Cover (RRP 1, on page 7-154).
2. Open the Left-Hand Door.
3. Loosen one screw from the Top Rear Cover.
4. There is a hidden captive tab on the front and side of this cover that resists the upward pull. Place your finger on the front side of the cover to release the tab and pull towards you.

## Cover, Left-Hand Rear, Mid

5. Remove one screw from the Left-Hand Rear Low Cover and remove the cover.
6. Remove one screw from the Left-Hand Rear Mid Cover.
7. Lift the cover up to release captive hooks then toward you out of the printer.

# RRP 6 Left-Hand Lower Cover Assembly

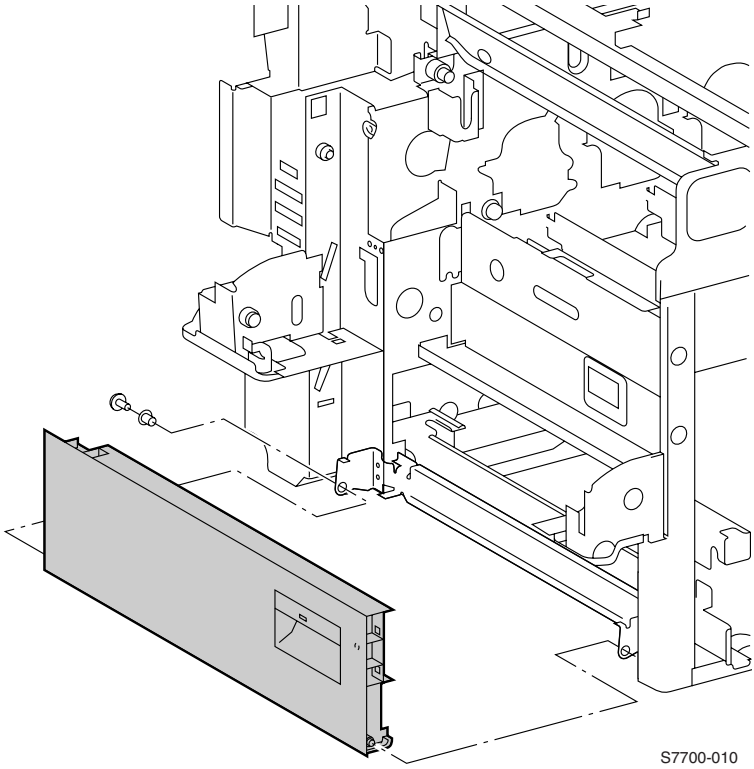


**Figure 7-6 Left-Hand Lower Cover Assembly**

## Removal

1. Open the Left-Hand Lower Cover Assembly.
2. Disconnect the sensor (in the door) wiring harness plug at the rear and free the harness from the clamp near the rear pivot.
3. With a flat tip screwdriver, pry out the pivot pin, then pry out the pivot pin expansion sleeve.
4. Remove the Left-Hand Lower Cover Assembly.

# RRP 7 Front Cover Assembly

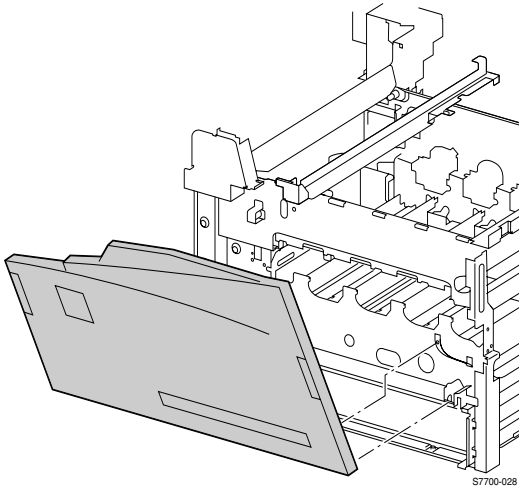


**Figure 7-7 Front Cover Assembly**

## Removal

1. Open the Front Cover Assembly.
2. Rotate the printer end of the strap 90 degrees and pull it straight out of the printer (both sides).
3. Remove the screws that secure the hinges and slide the hinges off the locating pin (both sides) and remove the hinge.
4. Remove the Front Cover Assembly.

# RRP 8 Fuser Front Cover

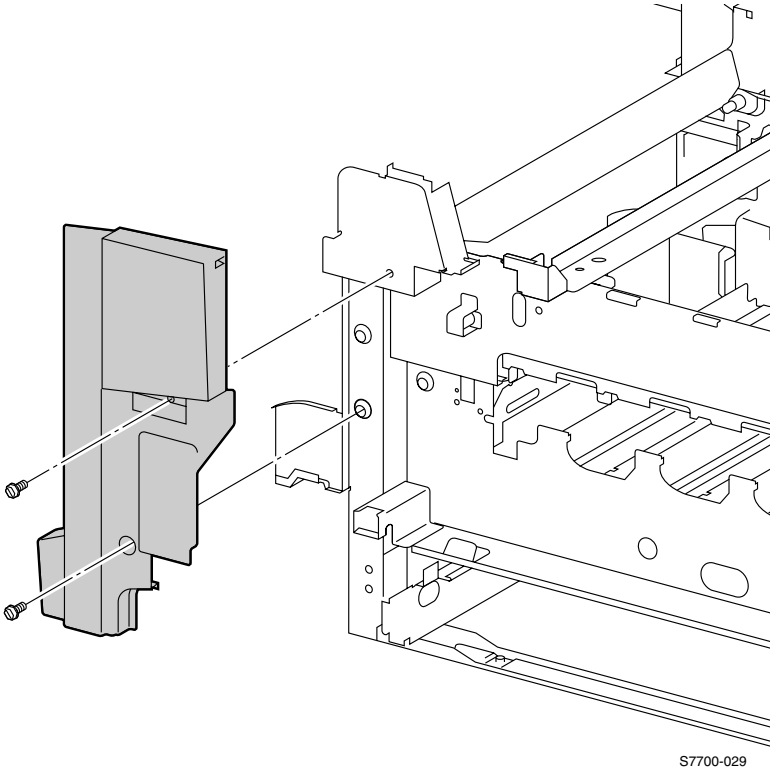


**Figure 7-8 Fuser Front Cover**

## Removal

1. Remove the Front Cover Assembly (RRP 7, on page 7-161).
2. Remove two screws from the Fuser Front Cover and push upward and remove the cover.

# RRP 9 Rear Shield

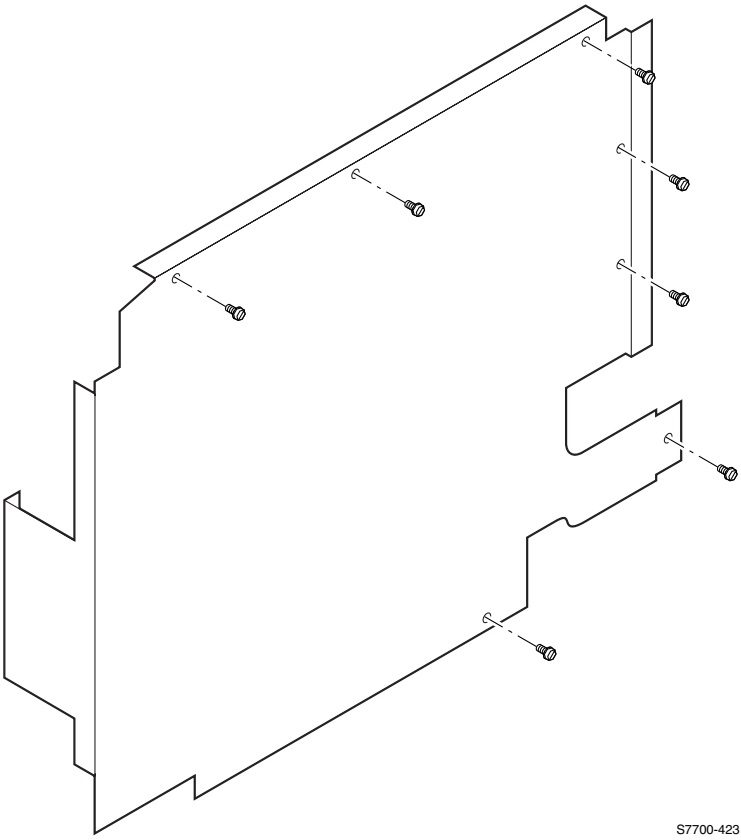


**Figure 7-9 Rear Shield**

## Removal

**Warning** Turn Off the power and disconnect the power cord.

1. Remove the Rear Cover (RRP 1, on page 7-154).
2. Remove the seven screws securing the Rear Shield to the printer.
3. Remove the shield.

# RRP 10 Rear Shield Bracket

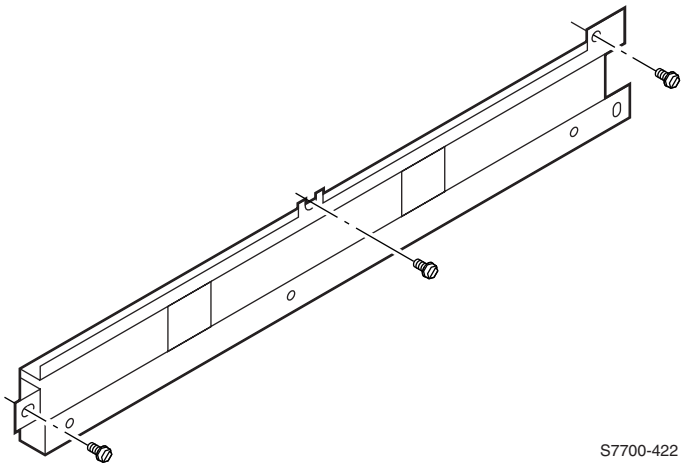


**Figure 7-10 Rear Shield Bracket**

## Removal

1. Remove the Rear Cover (RRP 1, on page 7-154).
2. Remove the Rear Shield (RRP 9, on page 7-163).
3. Remove the three screws securing the Rear Shield Bracket to the printer.
4. Remove the Rear Shield Bracket.

# RRP 11 24 VDC Power Supply Shield

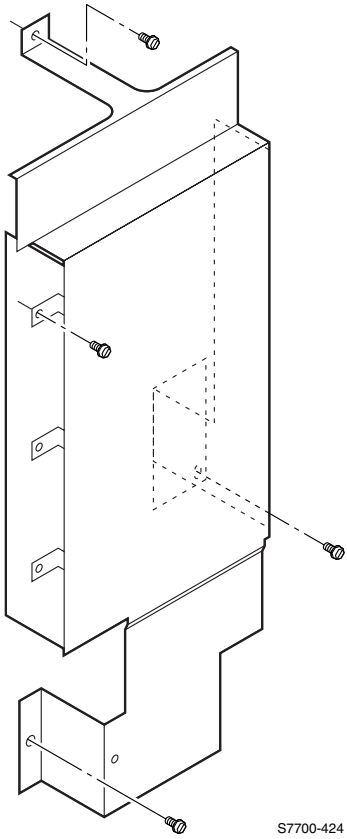


**Figure 7-11 24 VDC Power Supply Shield**

## Removal

1. Remove the Rear Cover (RRP 1, on page 7-154).
2. Remove the Rear Shield (RRP 9, on page 7-163).
3. Remove the Rear Shield Bracket (RRP 10, on page 7-164).
4. Remove the four screws securing the 24 VDC Power Supply Shield to the printer.
5. Remove the 24 VDC Power Supply Shield.

**Note** The left-hand tab fits behind the Rear Shield bracket to provide the threaded hole for this screw.

# RRP 12 Multi-Purpose Tray (MPT) Assembly

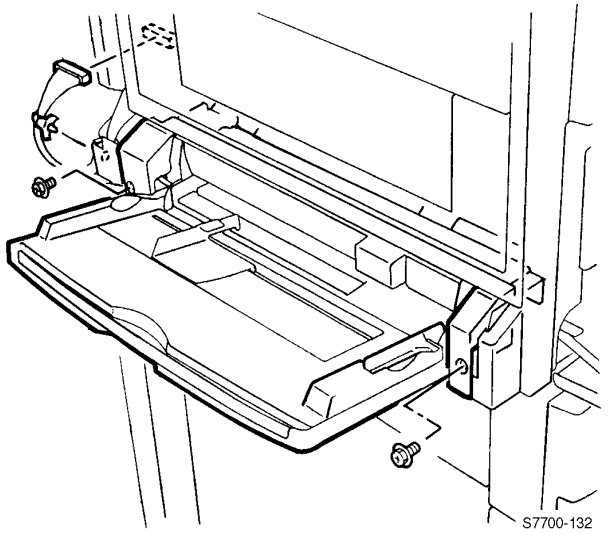


**Figure 7-12 MPT Assembly**

## Removal

**Note** Complete MPT removal is not necessary when doing jobs such as shutter solenoid or main motor assembly replacement. Remove the two MPT screws (step 5 below), and let the MPT hang by the wire harness for partial removal.

1. Remove the Top, Mid and Rear Covers (RRP 5, on page 7-158).

**Note** Note the routing of the MPT Assembly wiring harness. The wiring harness feeds through the access hole at the pivot point and up to the connector. When assembling, be sure the wire harness is behind the mounting tab.

2. Release the wiring harness clip from the printer's frame.
3. Pull the MPT Assembly wiring harness through the access hole.
4. Close the Left-Hand Cover Assembly (Left Door).
5. Remove the two screws that secure the MPT Assembly then pull the assembly out of the printer. A slight lift on the right-hand side of the MPT Assembly may help remove it from the printer.

**Caution** The Duplex Chute (RRP 15, on page 7-170) must be in the up position to install the MPT. Raise the Duplex Chute by reaching into the MPT installation hole.

**Caution** When reinstalling the MPT, make certain you DO NOT pinch the wire between the left bracket and the left screw hole.

# RRP 13 Multi-Purpose Tray Paper Pick Rollers

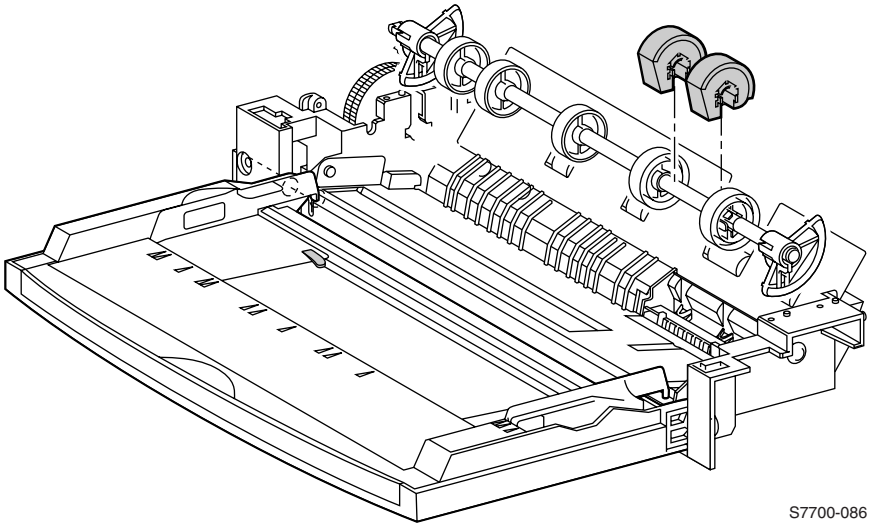


**Figure 7-13 Multi-Purpose Tray Pick Rollers**

## Removal

1. Open the left side door. Locate the pick rollers near the duplex chute.
2. Slide the white retainers away from the pick rollers.
3. Slide the pick rollers off the retaining pins.
4. Lift and remove the pick rollers.

# RRP 14 Left-Hand Cover Assembly (Left-Hand Door)

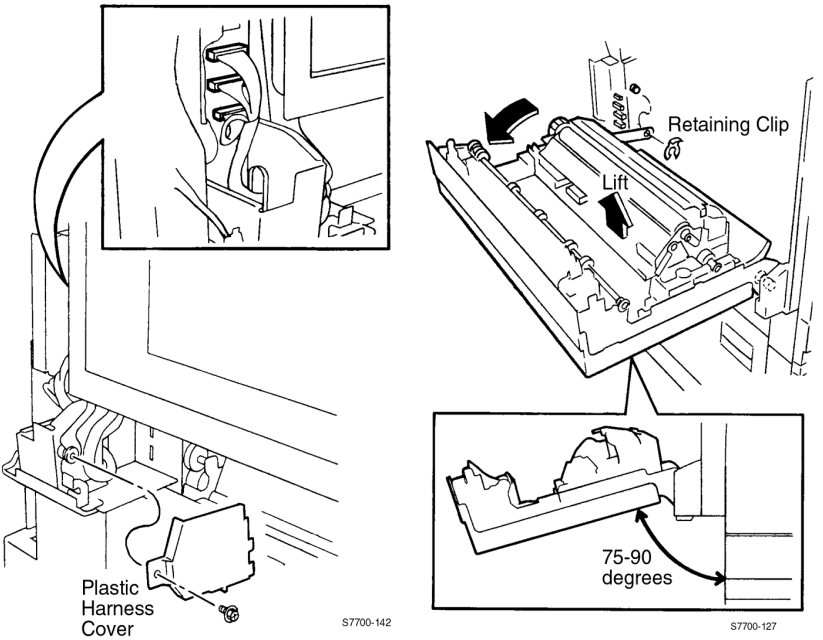


**Figure 7-14 Left-Hand Cover Assembly (Left-Hand Door)**

## Partial Removal

1. Partially remove the Multi-Purpose Tray (RRP 12, on page 7-166).
2. Remove one screw from the plastic harness cover inside the empty MPT slot and remove the plastic cover.
3. Open the Left-Hand Door.
4. Remove the retaining clip from the restraint post.
5. Support the Left-Hand Door, then remove the restraining bracket from the door.
6. Carefully lower the Left-Hand Door until it stops.

## Complete Removal

1. Remove the MPT (RRP 12, on page 7-166).
2. Remove one screw from the plastic harness cover inside the empty MPT slot and remove cover.
3. Open the Left-Hand Door.

**Note** Note how the wiring harness is routed through the access hole.

4. Disconnect the three wiring harnesses and slip the wiring harnesses through the access hole one connector at a time.

5. Remove the retaining clip off the restraint post.
6. Support the Left-Hand Door, and then remove the restraining bracket from the door.
7. While supporting the left side door, carefully lower it to 75-90° then remove the door by lifting it up off the pivot points.

## Replacement

1. Reverse the above steps to install the Left-Hand Cover Assembly (Left-Hand Door).

**Caution** When reinstalling the Left-Hand Door reach underneath the door and hold the black plastic duplex chute up to avoid breaking the chute while closing the left-hand door.

2. The damper at right-hand pivot of Left-Hand Door should be set as illustrated below.

**Caution** Align the marks on the damper whenever the Left-Hand Cover is removed or replaced to ensure the teeth are not damaged.

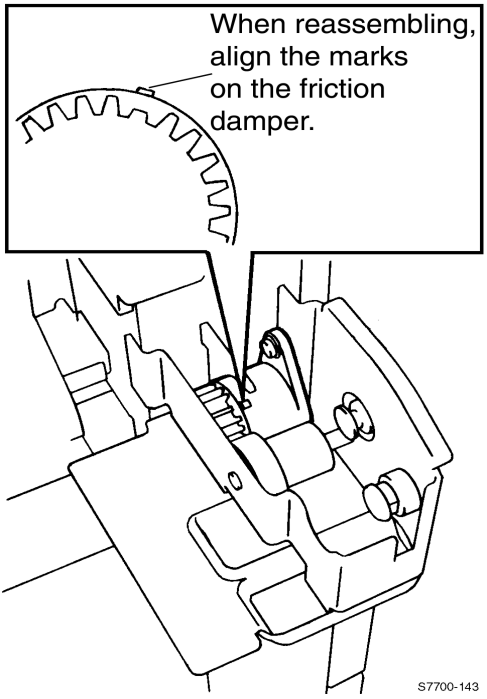


**Figure 7-15 Damper Teeth Alignment**

# RRP 15 Duplex Chute

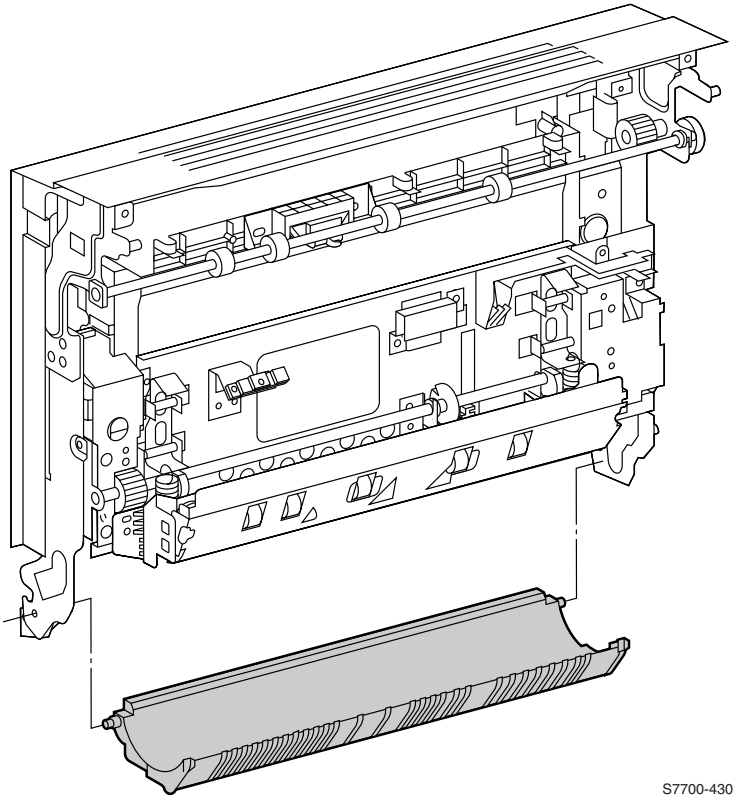


**Figure 7-16 Duplex Chute**

## Removal

1. Partially remove the Left-Hand Cover Assembly (Left Door) (RRP 14, on page 7-168).
2. Rotate the Duplex Chute downward until the keyed pivot shaft can be removed from the pivot bracket.
3. Remove the Duplex Chute.

# RRP 16 Duplex Unit Assembly

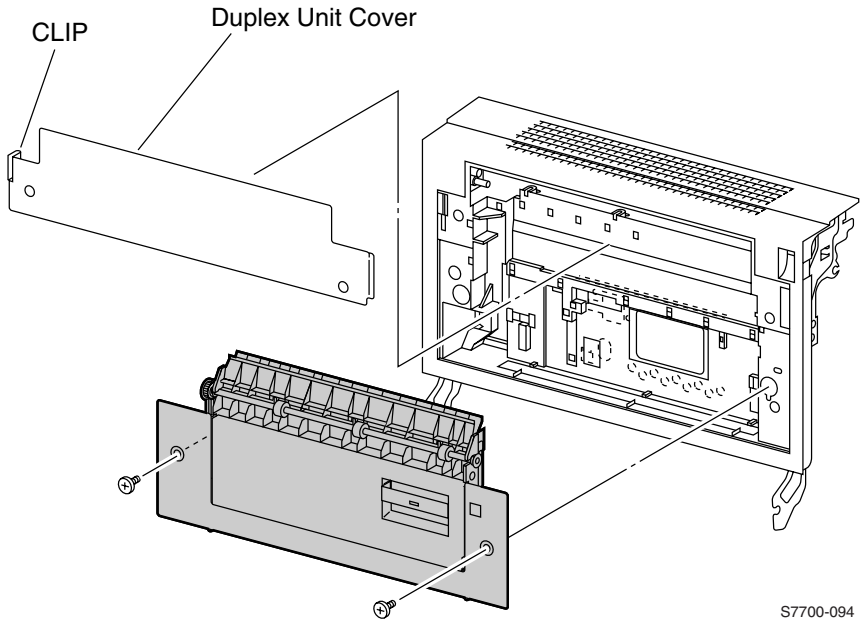


**Figure 7-17 Duplex Unit Assembly**

## Removal

1. Release the clip securing the Duplex Unit Cover and remove the cover.
2. Loosen the two captive screws securing the Duplex Unit Assembly to the Left-Hand Cover Assembly and remove.

# RRP 17 Transfer Roller Assembly (2nd BTR)

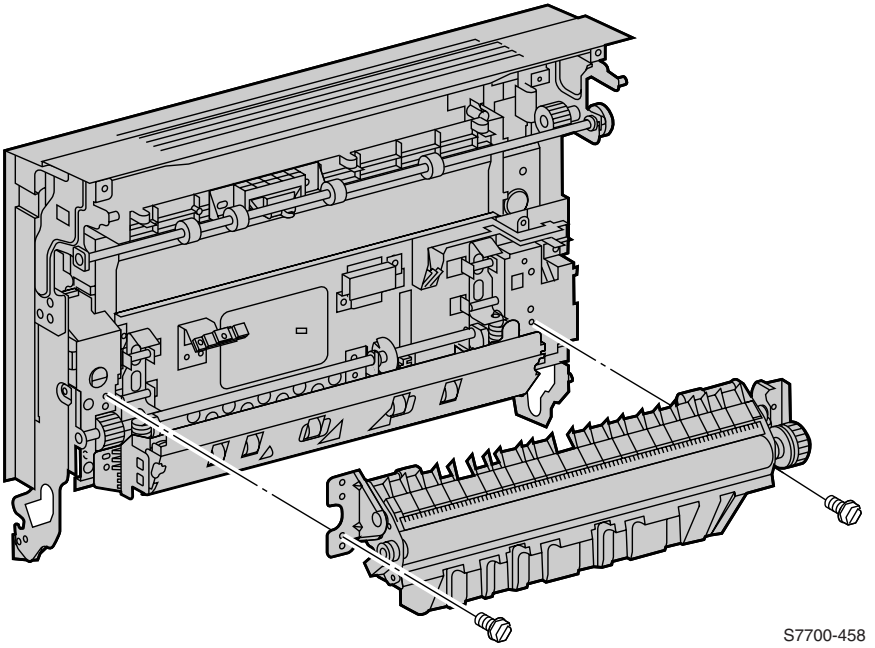


**Figure 7-18 Transfer Roller Assembly (2nd BTR)**

## Special Tool required:

*2.5 mm hex driver*

## Removal

1. Open the Left-Hand Cover Assembly (Left Door).
2. Using a 2.5 mm hex driver, remove the four captive screws from the mounting brackets (2) at each end of the Transfer Roller Assembly.
3. Remove the assembly.

## Replacement

**Note** Make sure the mounting brackets are seated on the locating pins as the screws are installed.

# RRP 18 Duplex Transport Assembly

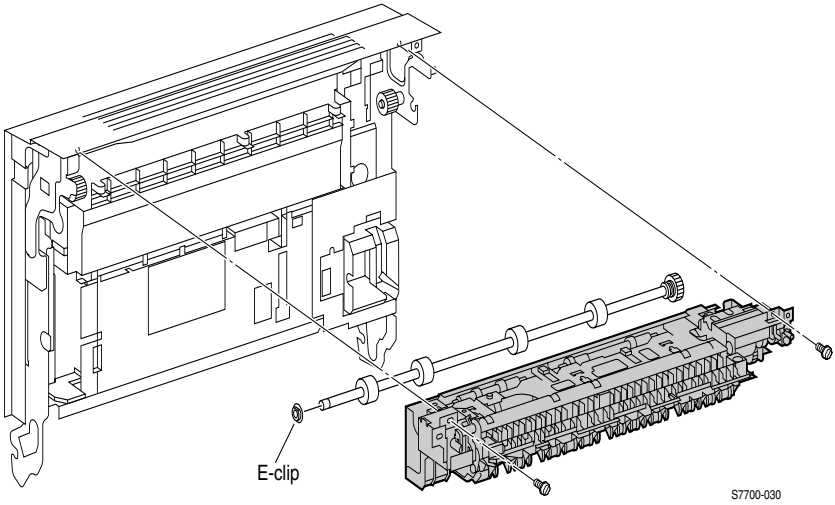


**Figure 7-19 Inverter Transport Assembly**

## Removal

1. Partially remove the Left-Hand Cover Assembly (Left Door) (RRP 14, on page 7-168).
2. Remove the e-clip and remove the shaft.
3. Remove the two screws that secure the Inverter Transport Assembly to the Left-Hand Door and remove the Inverter transport assembly.

# RRP 19 Fuser Unit

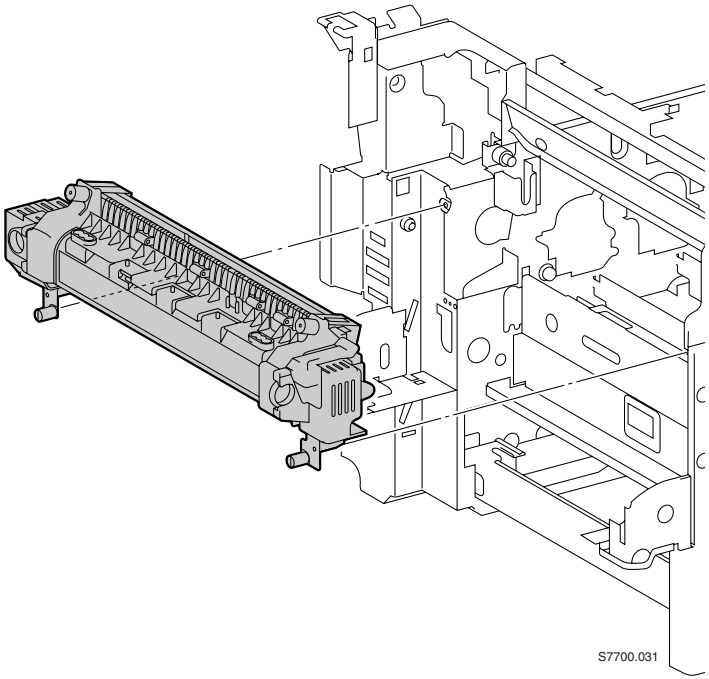


**Figure 7-20 Fuser Unit**

## Removal

1. Open the Left-hand Door.

**Caution** The Fuser Unit may be hot.

2. Unscrew the two thumb screws securing the Fuser Unit.
3. Using the pull handles, pull the Fuser Unit out of the printer.

# RRP 20 Registration Transport Assembly

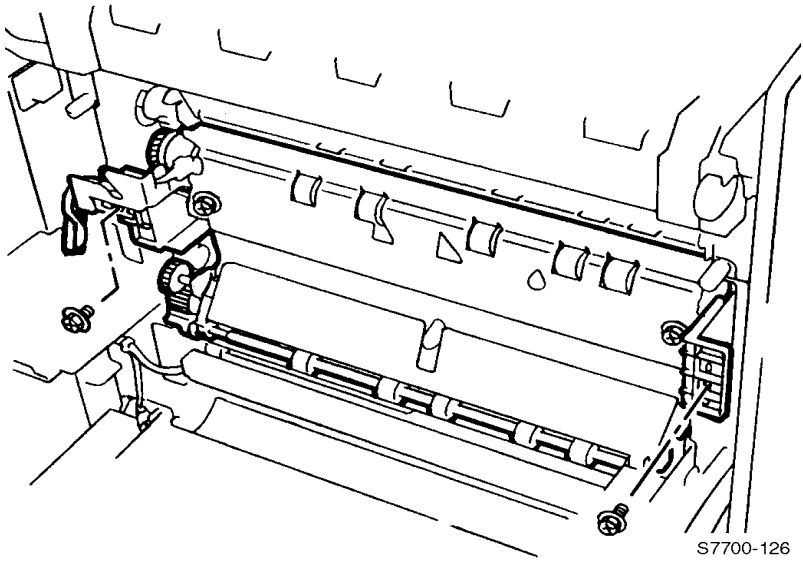


**Figure 7-21 Registration Transport Assembly**

**Note** Turn the printer power Off and unplug the power cord.

## Removal

1. Partially remove the MPT.
2. Remove the two screws from the plastic flanges that secure the assembly in the printer frame using a stubby screwdriver.

**Caution** Note the wiring harness routing in the above figure. Make certain the wires are routed behind the black plastic cover on the Registration Transport Assembly.

3. Disconnect the wiring harness.
4. Remove the registration transport assembly.

# RRP 21 Shutter Solenoid Assembly

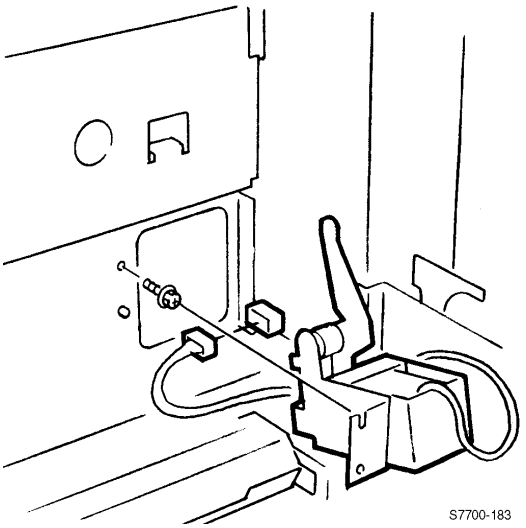


**Figure 7-22 Shutter Solenoid Assembly**

## Removal

1. Partially remove the MPT (RRP 12, on page 7-166).
2. Partially remove the Left-Hand Cover Assembly (Left Door) (RRP 14, on page 7-168).
3. Remove the Registration Transport Assembly (RRP 20, on page 7-175).

**Note** Note the wiring.

4. For easier access remove the Duplex Chute (RRP 15, on page 7-170).
5. Disconnect the wiring harness from the front frame connector.
6. Note the locating pin, then loosen the one screw that secures the assembly to the frame and remove the shutter solenoid assembly.

## Replacement

**Caution** It is very easy to miss positioning the lever back into the slot upon re-assembly.

1. Remove the Waste Toner Cartridge.
2. Remove the black Print Cartridge.
3. While reinstalling the shutter solenoid assembly, with a flashlight, view where the Solenoid Lever engages the notch in the shutter plate.
4. Tighten the mounting screw and reconnect the wiring harness.

# RRP 22 Tray 1 Feeder Assembly and Paper Lift Motor

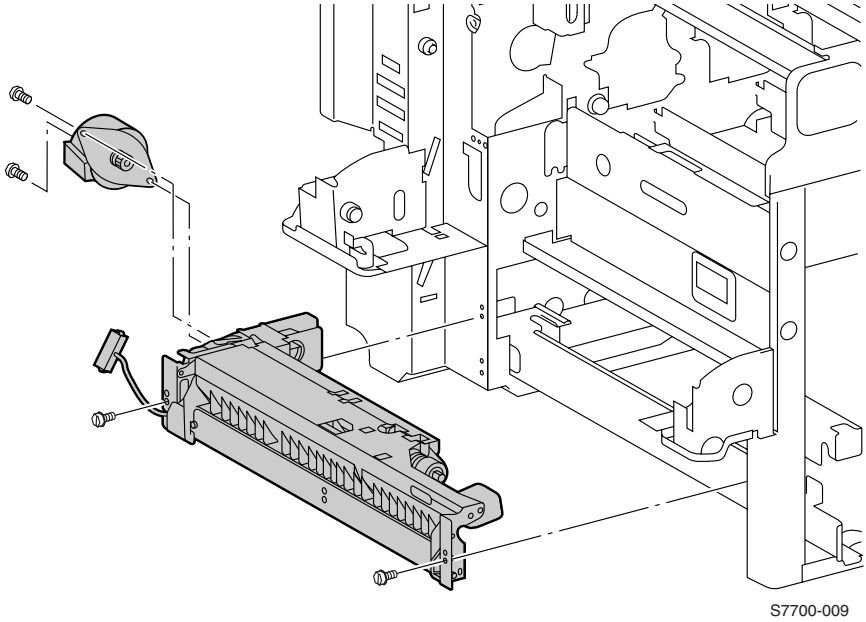


**Figure 7-23 Tray 1 Feeder Assembly**

## Removal

1. Remove the Left-Hand Lower Cover Assembly (RRP 6, on page 7-160).
2. Open Tray 1 halfway.
3. Disconnect the wiring harness.
4. Remove the two screws holding the Tray 1 feeder assembly, not the screws securing the lower tray bracket.
5. Remove the Tray 1 feeder assembly.

**Note** Some wiggling may be required to disengage the gears.

## Removal of the Motor

1. Disconnect the wiring harness from the motor.
2. Remove the two screws securing the motor to the feeder bracket.
3. Lift the motor straight out of the bracket to clear the gear on the motor shaft.

**Note** When reinstalling the motor, it may be necessary to manually rotate the gears to mesh them with the other gears.

# RRP 23 Waste Cartridge Sensor Holder

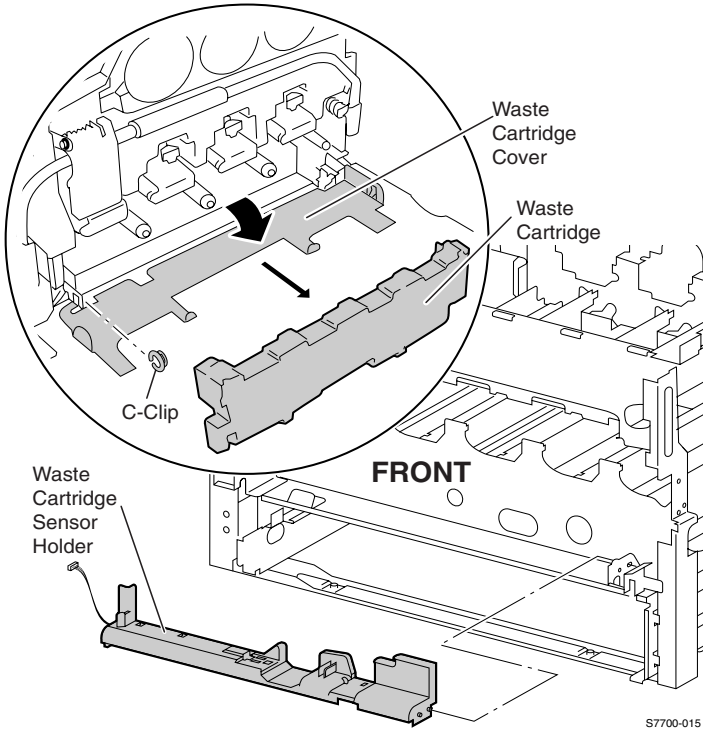


**Figure 7-24 Waste Cartridge, Waste Cartridge Cover and Waste Cartridge Sensor Holder**

## Removal

1. Open the Front Door.
2. Open the Waste Cartridge Cover.

**Caution** To avoid a toner spill and subesquent cleanup, use great care in removing the Waste Cartridge.

3. Remove the Waste Cartridge.
4. Remove the e-clip and remove cover.
5. Remove the screw securing the waste cartridge pivot hinge and remove the hinge.
6. Remove the Waste Cartridge Sensor Holder, disconnecting wire harnesses if needed to replace the sensor.

# RRP 24 Print Cartridge Plate Cover

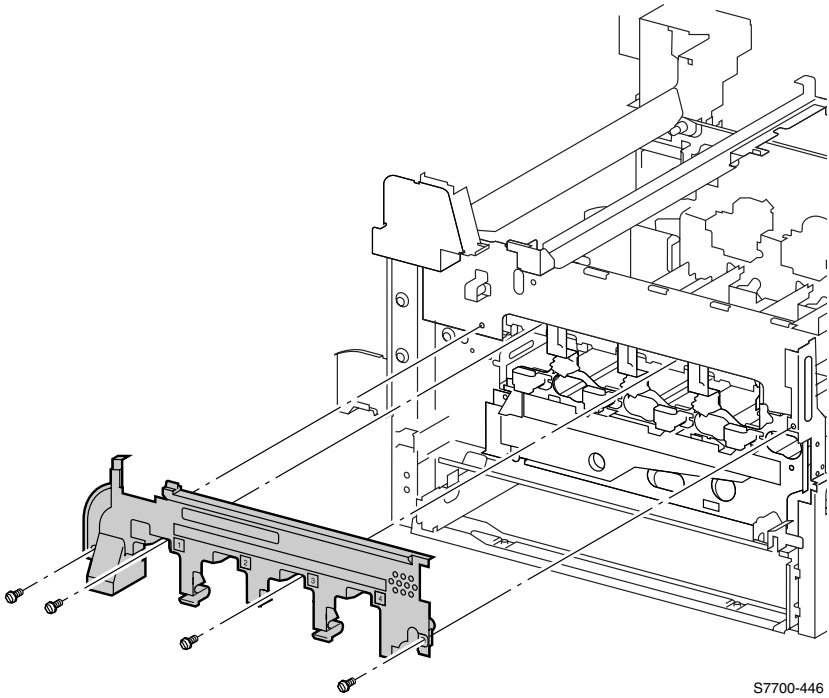


**Figure 7-25 Print Cartridge Plate Cover (plastic)**

## Removal

### Print Cartridge Plate Cover

1. Open the Front Door.
2. Remove Fuser Front Cover (RRP 8, on page 7-162).
3. Lower the main lever.
4. Remove the four screws.
5. Remove the plastic Print Cartridge Plate Cover.

# RRP 25 Dispense Assembly

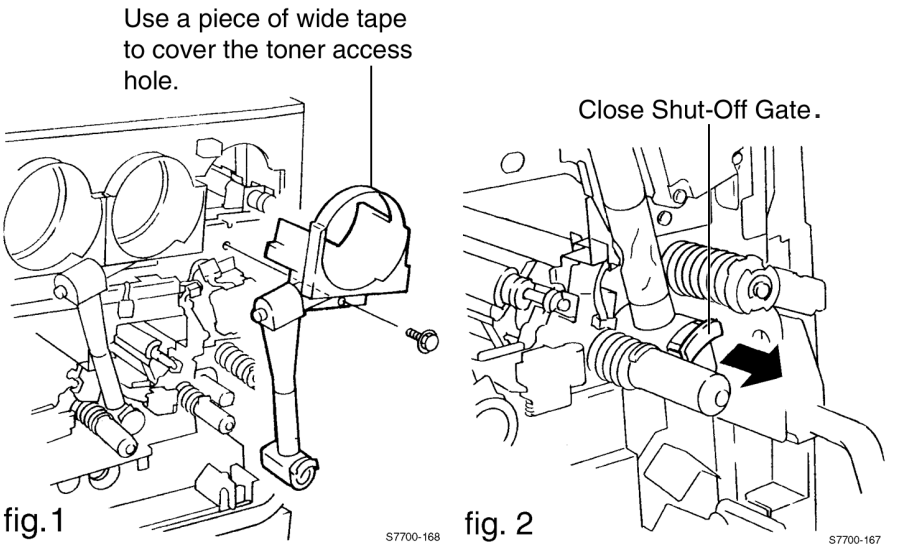


**Figure 7-26 Dispense Assembly**

## Removal

**Note** After replacing the Print Cartridge Plate Assembly, you must perform the RegiCon adjustment to the printer ,on page 4-130.

**Caution** Use only a type II toner vacuum to clean up toner spills.

**Note** Have a large sheet of newspaper or something similar available to place the removed assemblies on.

**Note** The dispense assemblies overlap and must be removed in the following order: Y - M - C - K, then reinstalled K - C - M - Y.

1. Open the Front Door.
2. Remove the print cartridges as necessary.

**Note** Cover the exposed opening with a wide piece of tape to avoid spillage. Do not overlap the tape to the base plate located behind the opening.

3. Remove the print cartridge plate cover (RRP 24, on page 7-179)
4. Leave the main lever down.

5. Pull the shut off gate of each toner cartridge toward you (approximately 3/4" [or 20mm]) to shut off the toner supply for each toner tube (see Figure 7-26, "Dispense Assembly," on page 7-180).

**Caution** Be careful when moving the stops. They are easily broken and may come out completely.

6. Remove the screw holding each dispense assembly to the printer.
7. Remove the dispense assembly by pulling both the top and bottom sections evenly away from the printer.

**Note** The flexible tubing is not secure and can come apart during removal and replacement causing toner spillage.

# RRP 26 Print Cartridge Plate Assembly

## Removal

**Caution** The Print Cartridges are very light sensitive. Store the Print Cartridge away from light. Do not touch the surface of the Print Cartridges.

1. Remove the Print Cartridges
2. Leave the main lever down.
3. Remove the Waste Cartridge Sensor Holder (RRP 23, on page 7-178).

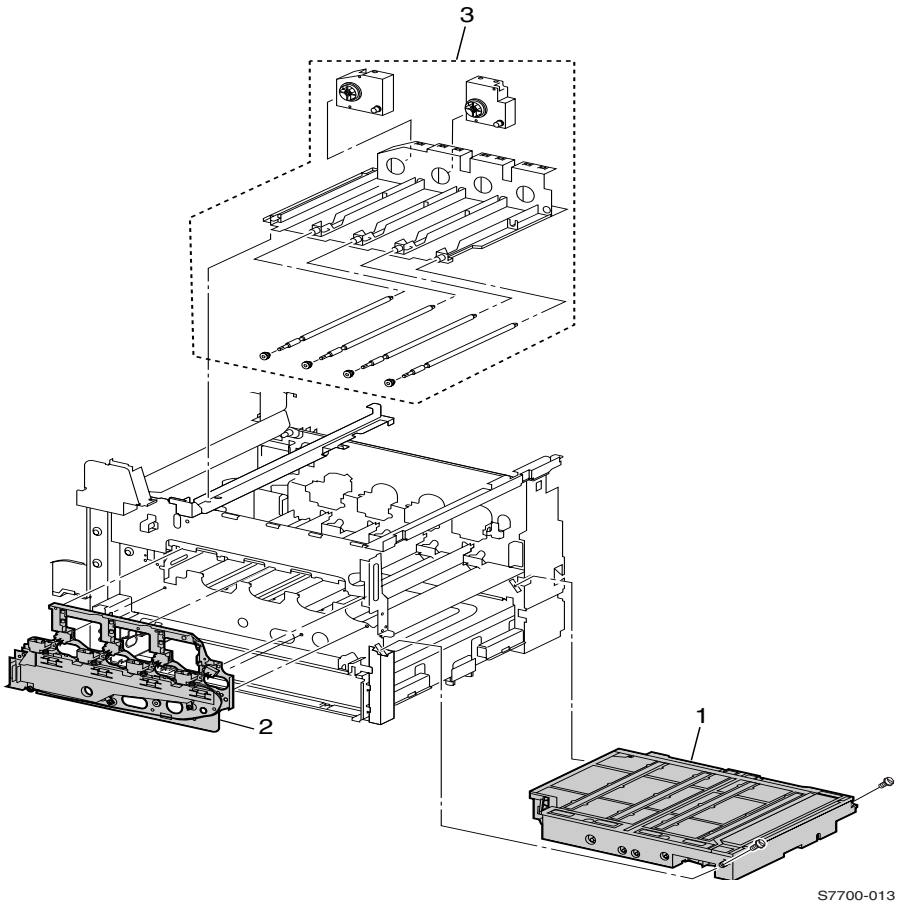


**Figure 7-27 Print Cartridge Plate Assembly**

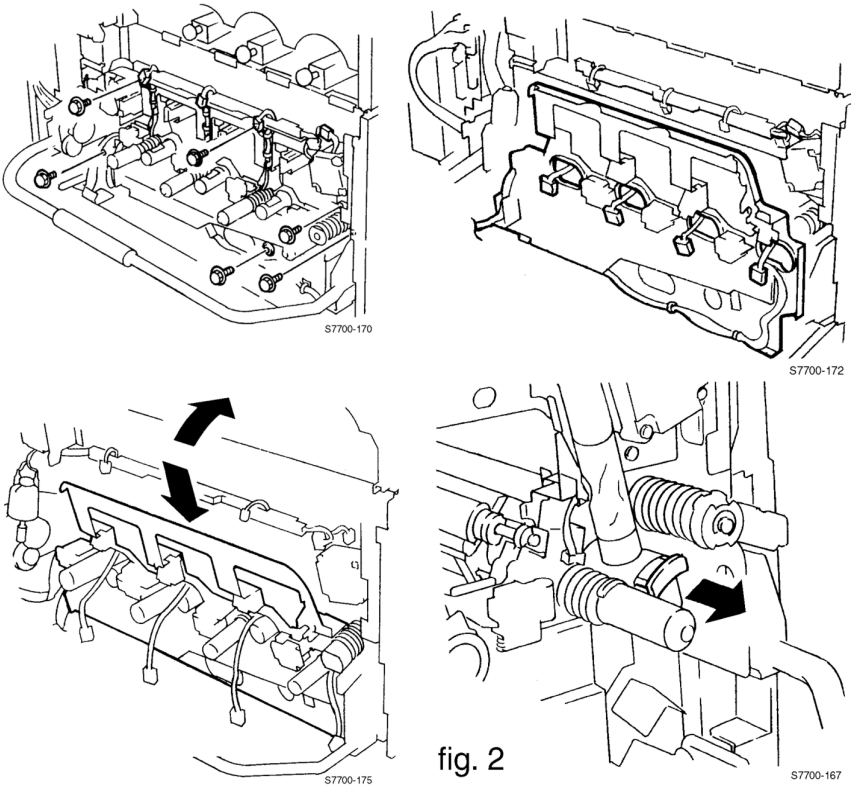


**Figure 7-28 Print Cartridge Plate Assembly (cont'd.)**

4. Remove the Print Cartridge Plate Cover (RRP 24, on page 7-179).
5. Remove the Dispense Assemblies (RRP 25, on page 7-180).
6. Disconnect the wiring harnesses to all four Developer Housing Assemblies and remove them from under their retaining clips and dress the wires so they stick straight out the front of the printer.
7. Clear the wire harnesses from the guide located on the lower left side of the assembly.
8. Remove the six chrome plated screws that secure the plate to the frame.

**Note** Stop here if only replacing developers. Complete removal of the Print Cartridge Plate Assembly is not required for removal of the Developer(s). Tilt the Print Cartridge Plate Assembly forward enough to allow the Developer(s) to be removed. Do not disconnect the Print Cartridge Plate harnesses.

9. Remove the screw securing the Left-Hand Inner Cover and remove the cover.
10. Disconnect the wiring harness from its retaining clip.

11. Disconnect the harness.
12. Remove the Print Cartridge Plate Assembly.

**Replacement.**

**Note** Ensure the developer assemblies are fully and evenly seated when reinstalling the Print Cartridge Plate Assembly. There is a locating pin at the back of each developer housing assembly.

**Note** Lightly tug the wires to ensure that they are not pinched by the plate or developers while reinstalling.

**Caution** Be very careful not to catch any of the wires on the left-hand side of the plate while re-installing.

**Caution** There are two locating holes in the PCPA that corresponds to locating pins on the frame of the printer. Failure to align the holes with the pins prior to tightening screws could result in bending the plate.

**Note** Center the connectors flat against the wire guide with the yellow developer connector further to the right.

# RRP 27 Developer Housing Assembly

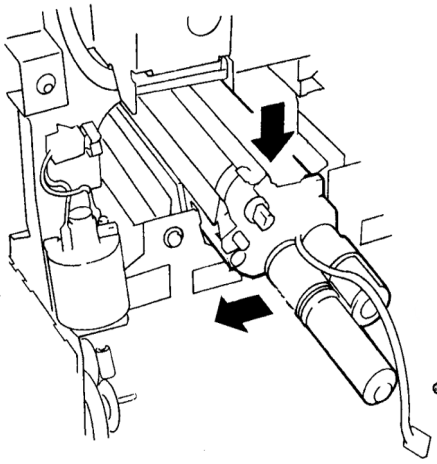


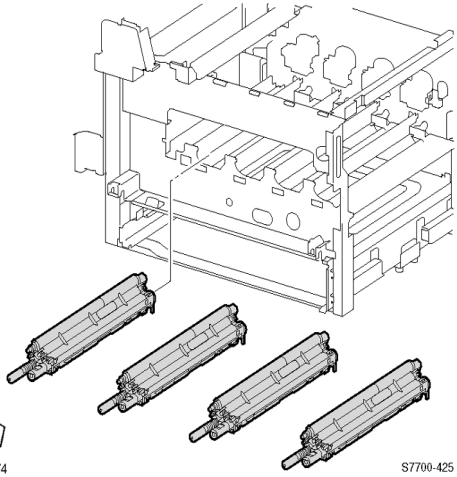


**Figure 7-29 Developer Housing Assembly**

## Removal

**Note** Complete removal of the Print Cartridge Plate Assembly is not required for removal of the Developer(s). Tilt the Print Cartridge Plate Assembly forward enough to allow the Developer(s) to be removed. Do not disconnect the Print Cartridge Plate harnesses.

1. Partially remove the Print Cartridge Plate Assembly (RRP 26, on page 7-182).
2. Remove the desired Developer Housing Assembly (RRP 27, on page 7-185).

**Note** A locating pin is at the back of each Developer Housing Assembly that matches a hole in the frame when positioned and seated correctly. A slight rotating back and forth of the assembly will help find the locating pin hole in the printer frame.

# RRP 28 New Developer Housing Assembly Charging

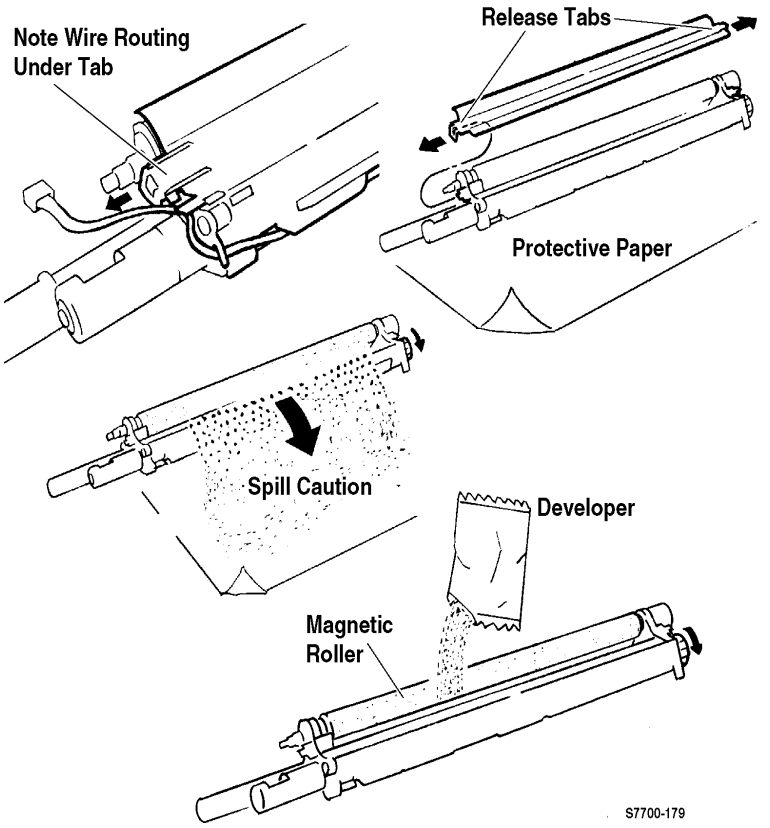


**Figure 7-30 Developer Housing Assembly Recharge**

## Recharging a Developer Housing Assembly

**Caution** If replacing a Developer Housing Assembly, write down the new ATC tag number. Remove the tear-off ATC tag number label, and adhere it to the appropriate print cartridge connector on the print cartridge plate assembly, then perform the procedure. See ATC Sensor Setup on page 4-142.

**Note** It is easy to spill toner in this procedure. Use only a type II toner vacuum to clean up any spilled toner.

1. Place the Developer Housing Assembly (new or used) to be recharged on large piece of newspaper or cloth.

**Caution** During this procedure, the Developer Housing Assembly must be kept in a **level** position at all times. It is recommended the Developer Housing Assembly be fully supported level by laying it on something like a large piece of cloth, paper towels or styrofoam hollowed out for the Developer Housing Assembly to lie on.

The reason for supporting the Developer Housing Assembly in a level position is to prevent spilling toner. If new, remove the protective cover over the magnetic roller. **Do not touch the magnetic roller.**

**Note** The wires are routed under and behind the right snap tab.

2. Release the snap tabs at each end of the Developer Housing Assembly and remove the assembly cover.
3. Cut open the package of Developer mix. Carefully pour the entire contents of Developer mix as evenly as possible over the two augers. Do not let the developer mix accumulate heavily on the roller. Keep the Developer Housing Assembly level.
4. Reinstall the cover making sure that the rear tabs are all engaged in their respective slots while positioning the wire harness under the snap tab. Press firmly until you hear a positive “snap” sound for each tab indicating each snap tab is securely fastened.
5. Tear off the ATC sensor tag label. Peal off the protective backing, and adhere the label to the appropriate or corresponding Print Cartridge Plate connector. Make sure the ATC sensor tag label can be located if needed later.

**Caution** It is important to re-enter the ATC value when replacing a developer. Not doing so could result in poor color balance and shortened developer life.

**Note** The ATC sensor tag is not accessible once the developer has been installed. Remove the label prior to installation.

# RRP 29 Toner Dispense Motor Assembly

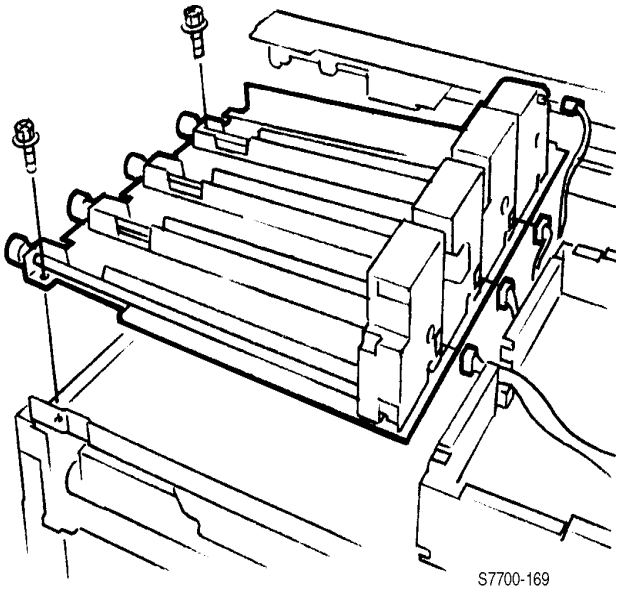


**Figure 7-31 Toner Dispense Motor Assembly**

## Removal

1. Remove Right Cover (RRP 2, on page 7-155) and the Top Cover Assembly (RRP 3, on page 7-156).
2. Remove the Dispense Housing Assemblies (RRP 25, on page 7-180).
3. Remove the two screws that secure the Toner Dispense Motor Assembly to the printer frame.
4. Disconnect the wiring harness from each motor.
5. Remove the Toner Dispense Motor Assembly.

# RRP 30 Steering Drive Assembly

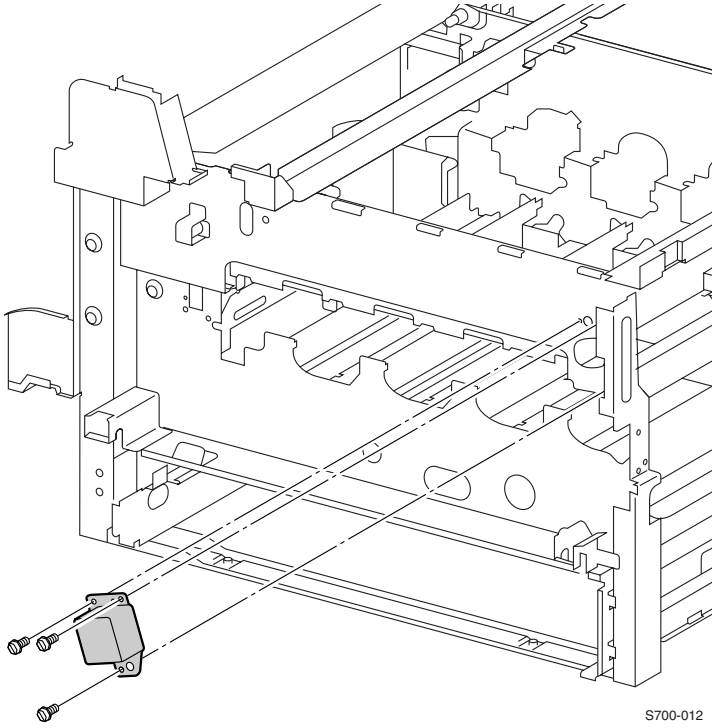


**Figure 7-32 Steering Drive Assembly**

## Removal

1. Remove the Print Cartridges and Print Cartridge Plate Cover (RRP 24, on page 7-179).
2. Disconnect the wiring harness.
3. Remove the three screws and remove the Steering Drive Assembly.

**Note** You may have to rotate the CAM gear to reinstall the Steering Drive Assembly.

# RRP 31 Waste Toner Agitator Motor Assembly

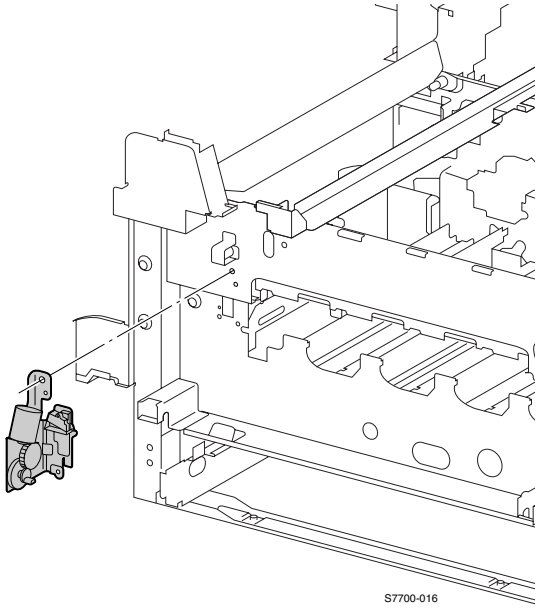


**Figure 7-33 Waste Toner Agitator Motor Assembly.**

## Removal

1. Remove the Print Cartridge Plate Cover (RRP 24, on page 7-179).
2. Remove the Waste Cartridge Assemblies (RRP 23, on page 7-178).
3. Disconnect the wiring harness to the motor.
4. Remove the two screws that secure the Agitator Motor Assembly to the printer frame.

# RRP 32 Mark-On-Belt (MOB) Sensor

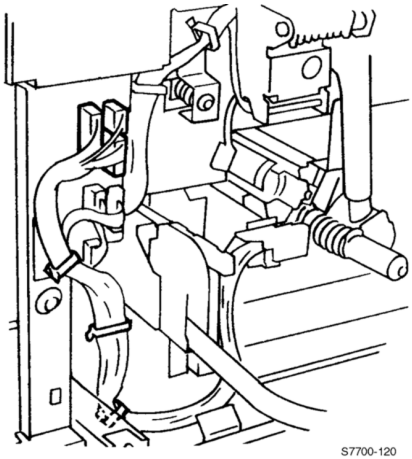


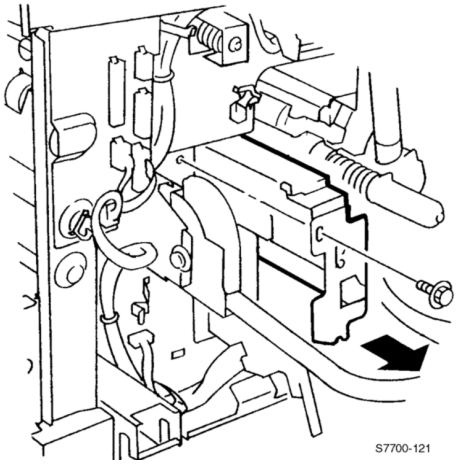


**Figure 7-34 Mark-On-Belt Sensor**

## Removal

1. Remove the Waste Cartridge Assembly (RRP 23, on page 7-178).
2. Remove the Waste Toner Agitator Motor (RRP 31, on page 7-190).
3. Remove left-hand inner cover.
4. Disconnect the purple harness.
5. Remove the wiring harness from three clips.
6. Remove the one black screw and remove the Mark-On-Belt assembly

**Note** If the Mark-On-Belt adjustment procedure (RegiCon DC685-3) is being performed, then proceed to the following steps.

Reverse these steps to install the Mark-On-Belt assembly, or pull the MOB sensor back into the original position if the CD685-3 procedure was performed. Store the plunger back in the front cover.

# RRP 33 Exit Transport Assembly

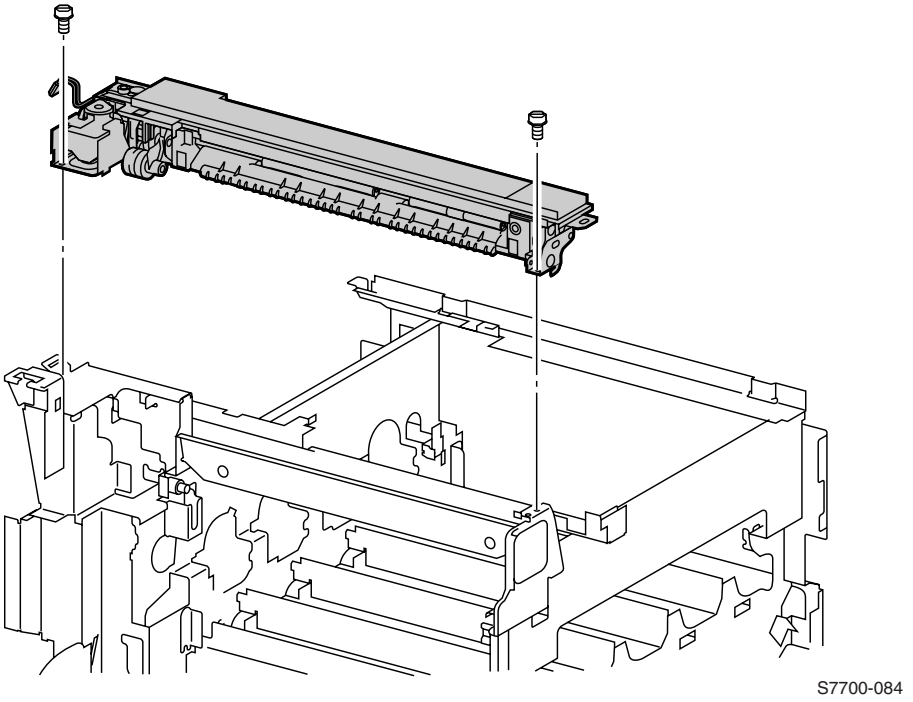


**Figure 7-35 Exit Transport Assembly**

## Removal

1. Remove the Rear Cover (RRP 1, on page 7-154).
2. Remove Left-Hand Top Power Switch Cover (RRP 5, on page 7-158).
3. Remove the Fuser Front Cover (RRP 8, on page 7-162).
4. Open left-hand cover.
5. Remove the one screw securing the Transport Assembly Cover and remove the cover.
6. Disconnect the harnesses to the Transport Assembly and the left-hand cover interlock connector.
7. Remove the three screws securing the Transport Assembly and remove.

## Reconfigured Inverter Transport Assembly (P/N 116-1161-00)

**Note** When replacing the Inverter Transport Assembly, do not transfer any parts from the original assembly to the replacement asssembly. The replacement assembly will work correctly in the Phaser 7700 printer.

Parts required for the Side Exit Exit Assembly (an option not available on the Phaser 7700) are no longer installed on the Inverter Transport Assembly (P/N 116-1161-00). The revised configuration is shown in Figure 7-36.

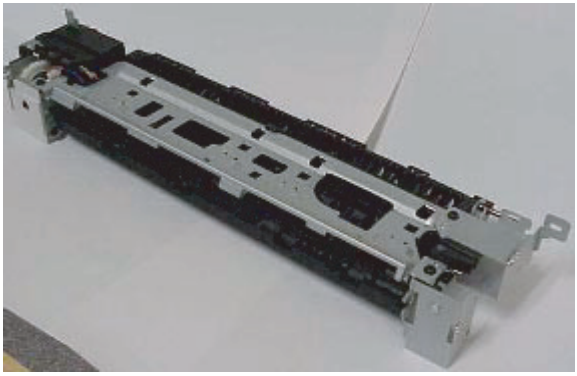

s7700-568

**Figure 7-36 Reconfigured Inverter**

The parts that are NOT necessary for the Inverter Transport Assembly to work correctly in the Phaser 7700 are shown in Figure 7-37.

**Note** The Roller shown in Figure 7-37 is NOT the Exit Roller Assembly P/N 116-1759-00.

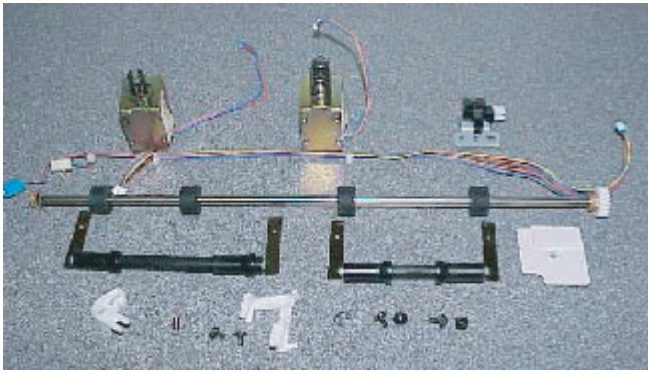

s7700-569

**Figure 7-37 Parts No Longer Installed**

The Interlock Actuator and two 0.5 mm spacers are now being added to the Inverter Transport Assembly packaging as a separate item (see Figure 7-38). If only the Interlock Actuator is broken, it can now be replaced individually. The 0.5 mm spacers should be placed between the Interlock Actuator and the Inverter Transport Assembly.

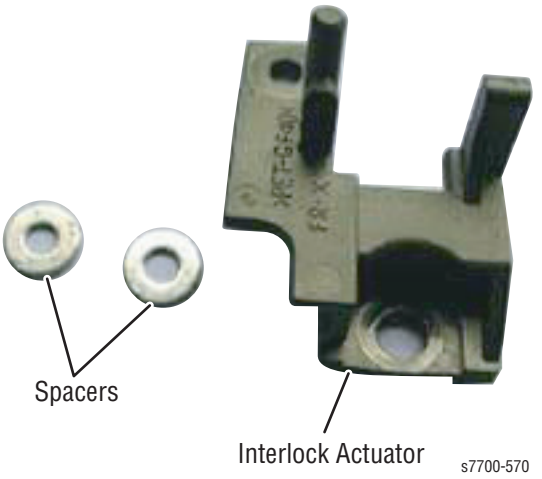


**Figure 7-38 Interlock Actuator and Spacers**

# RRP 34 Fuser Fan Assembly

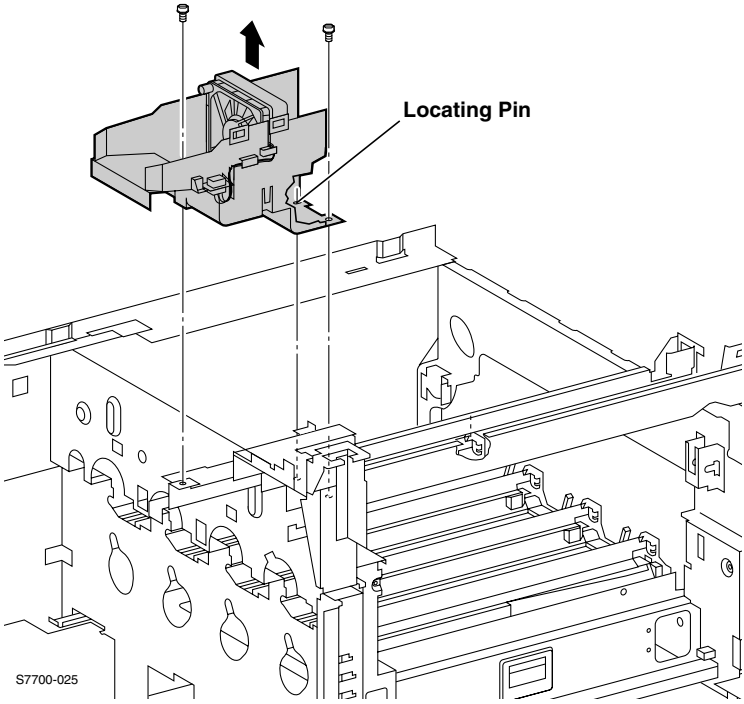


**Figure 7-39 Fuser Fan Assembly**

## Removal

1. Remove the Rear Cover (RRP 1, on page 7-154).
2. Remove the Top Cover (RRP 3, on page 7-156).
3. Remove Right Side Cover (RRP 2, on page 7-155).

**Note** Note the routing of the wiring harness.

**Note** It is easier to re-install the wire harness if the Fuser Fan and plastic mounting bracket are removed from the printer.

4. Remove the two screws that secure the Fuser Fan Assembly and remove the assembly.
5. Disconnect the wiring harness.

# RRP 35 Accumulator Belt Assembly

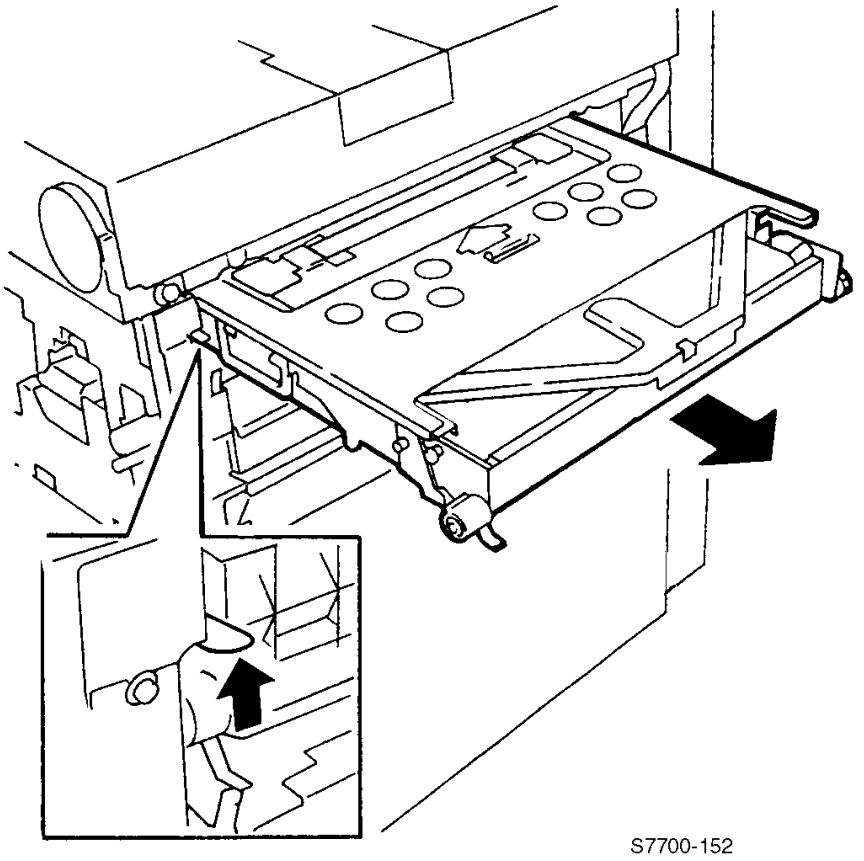


**Figure 7-40 Accumulator Belt Assembly**

### Removal

1. Open the right cover door.
2. Open the front cover and lower the main lever.
3. Lift the Accumulator Belt locking lever and pull the assembly out of the printer. You need to hold the locking lever up until the white nylon handle is exposed.

**Caution** The Accumulator Belt assembly is heavy. Use the white nylon handle when removing the assembly from the printer. Do not get fingerprints on the belt.

**Note** Metal tabs allow the Accumulator Belt to be laid on a flat surface. It can also be carried by the black handle located on the side.

### Replacement

**Note** When reinstalling the Accumulator Belt assembly the black handle faces the front of the printer.

**Caution** Ensure that the Accumulator Belt is fully inserted or severe printer damage will result. **NEVER FORCE THE MAIN LEVER!**

# RRP 36 Belt Cleaner Assembly

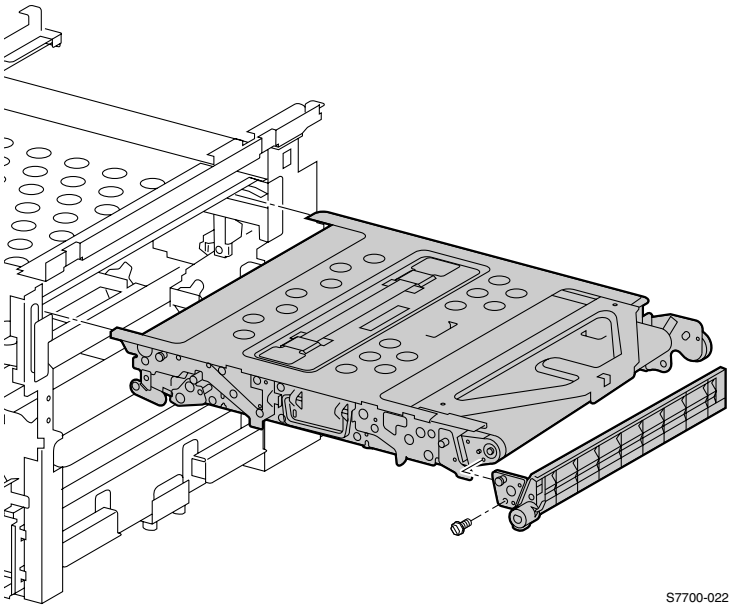


**Figure 7-41 Belt Cleaner Assembly**

## Removal

1. Open the right cover door.
2. Open the front cover and lower the main lever.
3. Lift the Accumulator Belt locking lever and pull the assembly out a few inches.
4. Using a 2.5 mm hex driver remove the two screws on the left side of the belt cleaner assembly.
5. Remove the belt cleaner assembly.

## Replacement

**Caution** Never run the printer without the belt cleaner installed or severe damage to the Accumulator Belt will occur.

**Caution** Ensure that the Accumulator Belt is fully inserted or severe printer damage will result. **NEVER FORCE THE MAIN LEVER!**

# RRP 37 Waste Auger Assembly

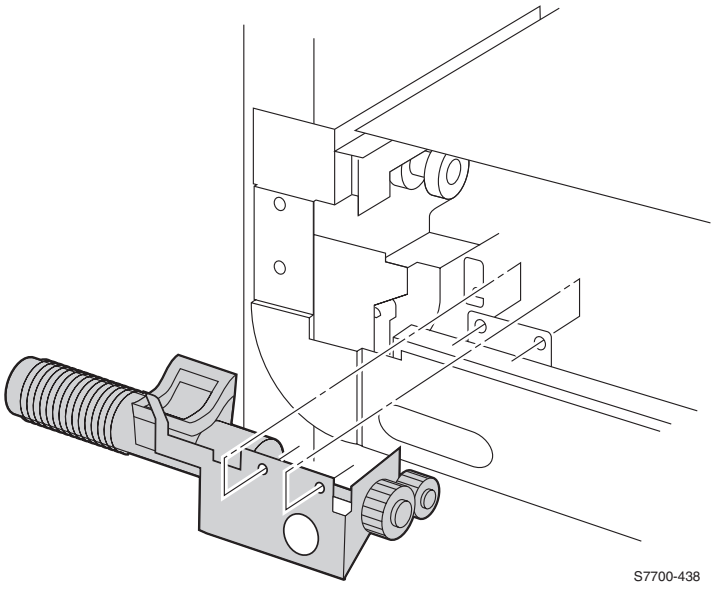


**Figure 7-42 Waste Auger Assembly**

## Removal

1. Remove the Right Side Cover (RRP 2, on page 7-155).
1. Remove Waste Toner Cartridge and lower the main lever.
2. Remove Accumulator Belt assembly.
3. Return the main lever to its upright position.
4. Remove the two screws securing the Waste Auger Assembly.
5. Shift the Waste Auger Assembly to remove the drive shaft from the bearing and remove the waste auger assembly.

**Note** Be careful not to knock the bearing out of its seat.

**Caution** When reinstalling, be sure to return the main lever down before reinstalling the Accumulator Belt Assembly.

# RRP 38 Laser Unit

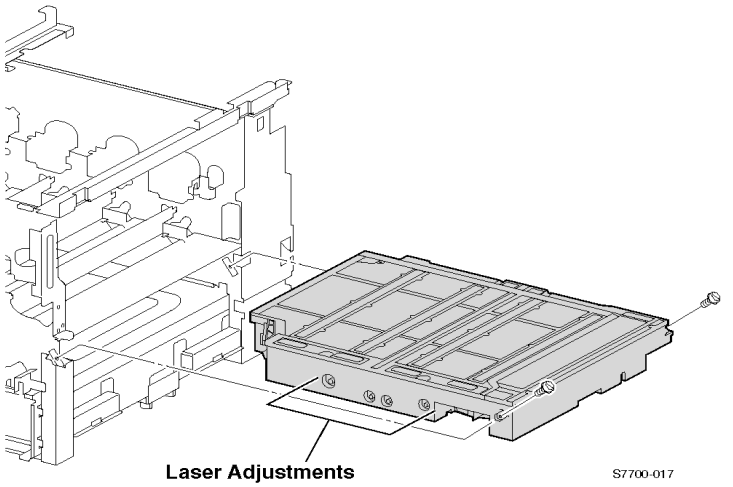


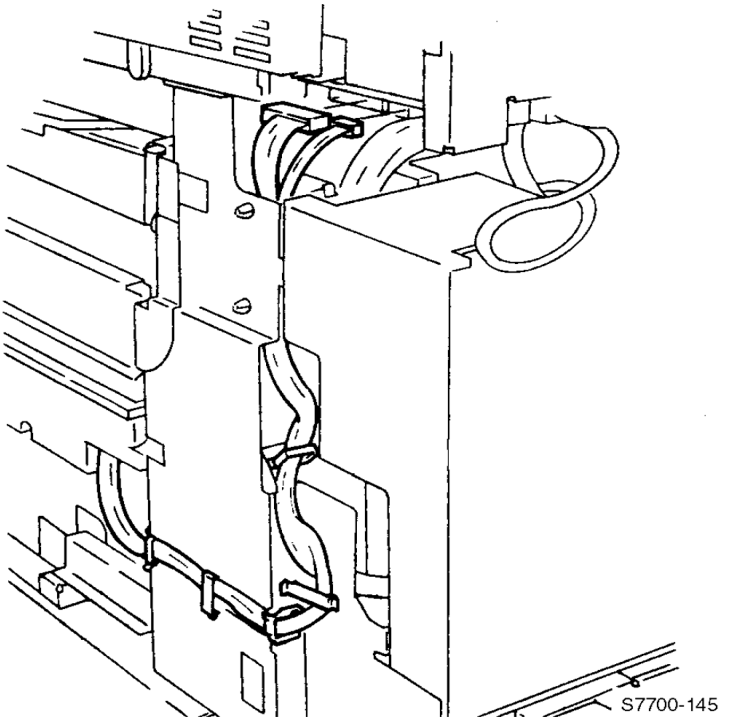


**Figure 7-43 Laser Unit Assembly**

## Removal

1. Remove the Rear Cover (RRP 1, on page 7-154).
1. Remove the Right-Hand Cover (RRP 2, on page 7-155).
2. Disconnect the wiring harnesses at engine board P400 and 401.
3. Undo the retainers and undo the wiring harness.

**Note** Note the routing of the laser unit wiring harness up to the engine control board.

4. Remove the two screws securing the laser unit in the printer.

**Caution** The laser unit is heavy.

5. Pull the Laser Unit out of the printer.

## Replacement

You must perform the RegiCon adjustment procedures after replacing the Laser Unit Registration Control Procedures on page 4-130. Store the NVRAM values to the hard drive after calibration. Store Engine NVRAM on page 6-150.

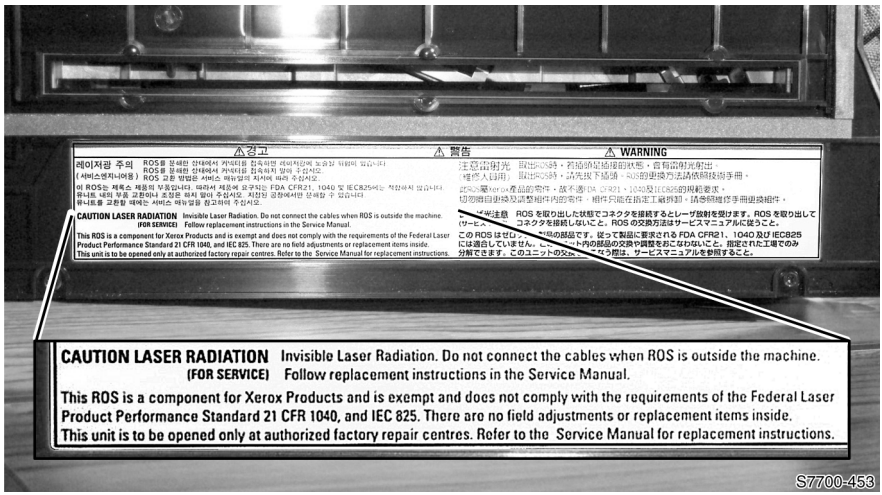


**Figure 7-44 Laser Unit Label**

# RRP 39 Image Processor Board Assembly

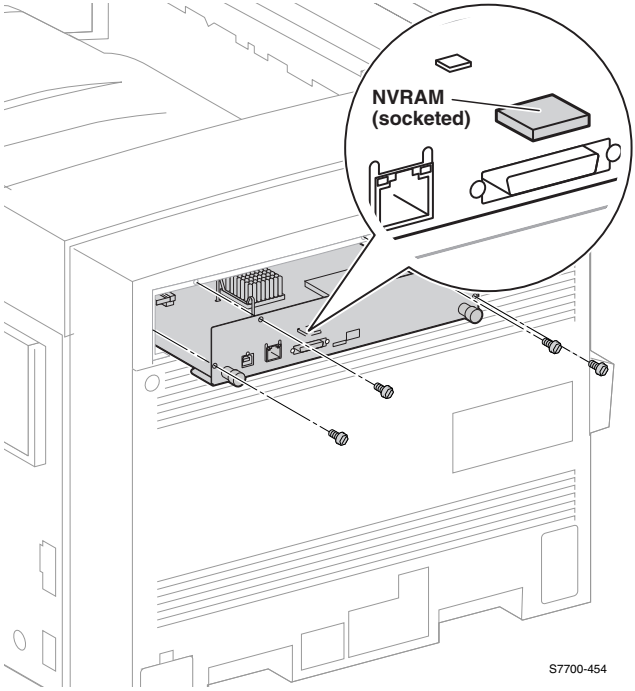


**Figure 7-45 Image Processor Board Assembly.**

**Note** Turn the printer power Off and unplug the printer.

**Caution** The Image Processor Board is susceptible to ESD damage. Observe proper ESD procedures.

1. Disconnect all communication cables.
2. Remove the four screws and remove the image processor board.
3. Remove the Internal Hard Drive (RRP 40, on page 7-203).
4. Remove the socketed NVRAM chip located near the parallel port connector from the board just removed and use it to replace the one on the new board to preserve the customer's network and setup values.

**Note** Remove the image processor top cover and the metal plate to inspect that the image processor board is fully seated when reinstalling.

# RRP 40 Internal Hard Drive

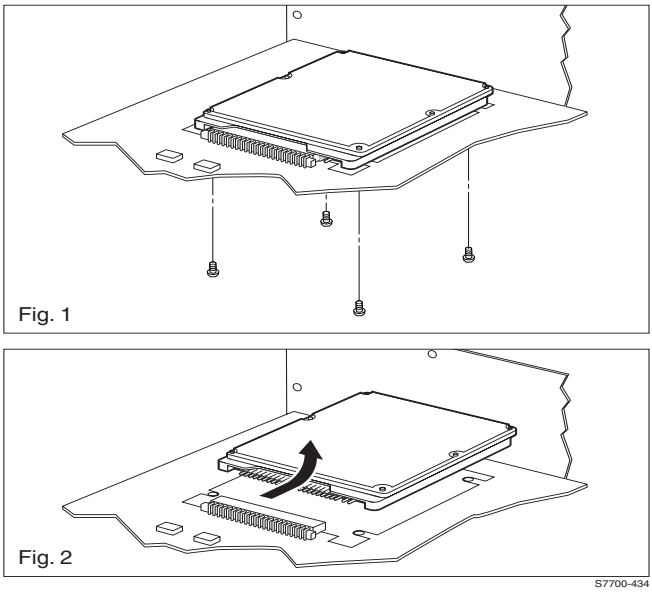


**Figure 7-46 Internal Hard Drive**

**Caution** The Internal Hard Drive is susceptible to ESD damage. Observe proper ESD procedures.

1. Remove the Image Processor Board. See (RRP 39, on page 7-202).
2. Using a T-10 torx bit, remove four screws on the bottom side of the Image Processor Board holding the Internal Hard Drive.
3. Slide the Internal Hard Drive away from the connector.

**Note** It is possible to mis-align the pins when seating the new Internal Hard Drive.

**Caution** If you replace the Internal Hard Drive, you must enter Service Diagnostics Mode and run the “Store NVRAM” test.

# RRP 41 Electrical Chassis (Card Cage) Assembly

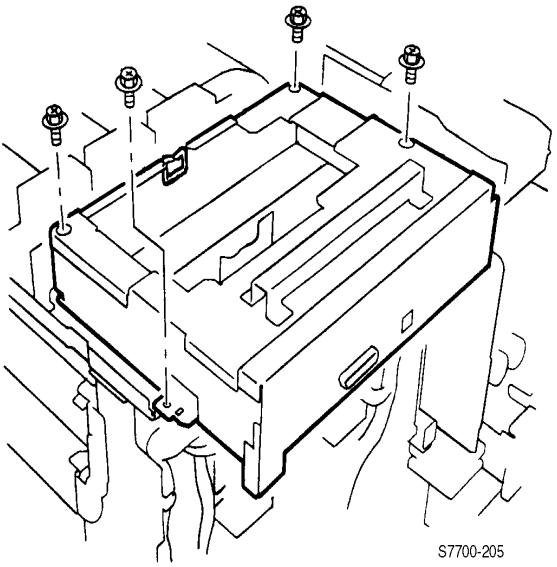


**Figure 7-47 Electrical Chassis Assembly**

## Removal

**Caution** Before removing the Electrical Chassis Assembly, it is recommended to store Engine NVRAM data on the Hard Drive (see Store Engine NVRAM on page 6-150).

1. Remove the Right Cover (RRP 1, on page 7-154).
2. Remove the Top Cover (RRP 3, on page 7-156).
3. Remove the Rear Cover (RRP 5, on page 7-158).
4. Remove all three Shields (RRP 10, on page 7-164).
5. Remove the Image Processor Board (RRP 39, on page 7-202).
6. Disconnect the nine wiring harnesses along the edges of the engine controller board. Seven of these harnesses are in front of the controller board. The other two are on the left side.

**Note** Two of the engine control connectors have connector locks. There is one harness clip to release.

7. Undo the harness retainer. Disconnect the wiring harness to the relay board connector P300 and the front panel cable to P564.
8. Remove the two mounting screws towards printer rear, but **only loosen** the two mounting screws towards the printer front.

**Note** The two screws toward the printer front serve as a guide for reinstallation.

9. Lift and tilt the cage assembly to release it from the engine control interface board connector below the cage assembly and remove the assembly.

## Replacement

**Note** Before re-installing the assembly, widen the gap in each of the two white nylon retainers to ensure that they successfully engage the interface board bracket. Mis-alignment prevents a good connection to the interface board.

1. Tilt and insert the engine control board assembly under the two loosened screws.
2. Carefully lower the assembly onto the engine interface board connector.
3. Push lightly into the center of the assembly to ensure the assembly is fully seated.If board is reasonably stable, the board is properly placed.
4. Continue installation by reversing the removal procedures.

**Note** Ensure that all connections are firmly seated, pay special attention to the laser unit connections on the printers right side.

**Note** After replacement of the Engine Control Board, perform the Reset Engine NVRAM procedure on page 6-150.

# RRP 42 Engine Control Board

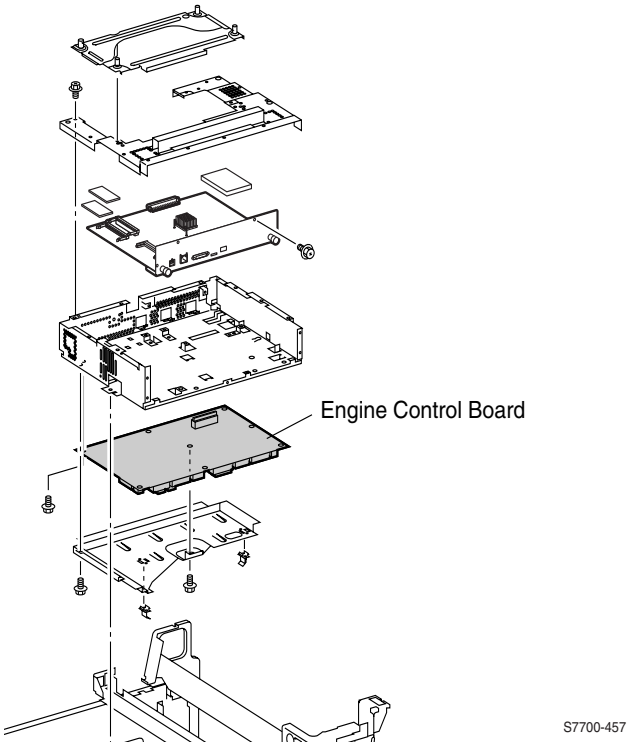


**Figure 7-48 Engine Control Board**

## Removal

1. Store the engine board NVRAM values to the hard drive (Store Engine NVRAM on page 6-150).
2. Remove the Electrical Chassis (Card Cage) Assembly (RRP 41, on page 7-204)
3. Disconnect the orange ribbon cable at the engine board connector P460.
4. Remove the 8 screws securing the engine control board metal shield and remove the shield.
5. Remove the remaining six screws and remove the engine board.

**Note** When reinstalling the Engine Control Board, be sure to seat connector P460 fully.

**Note** Restore engine NVRAM values from the hard drive (Reset Engine NVRAM on page 6-150).

6. Write the stored NVRAM values to the engine board using the Service Diagnostics procedure (Reset Engine NVRAM on page 6-150).

# RRP 43 Engine Control Interface Board

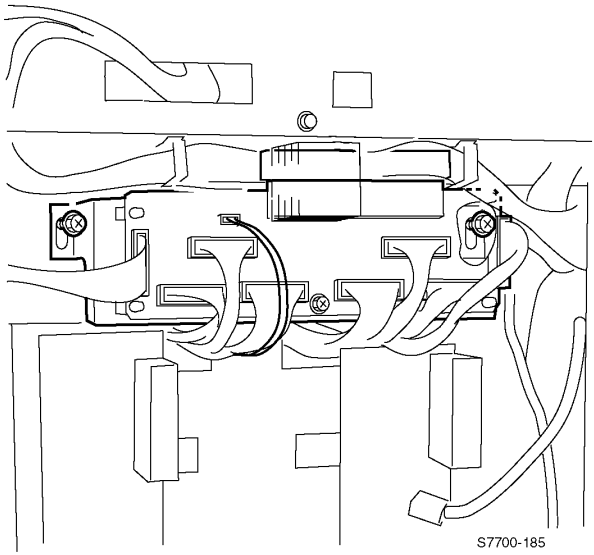


**Figure 7-49 Engine Control Interface Board**

## Removal

### Method #1

1. Remove the Engine Control Board (RRP 42, on page 7-206).
2. Disconnect the eight wiring harnesses.

**Note** Two connectors (J537, J536) have locks to release before pulling on the harnesses.

3. Remove the two screws that secure the Engine Control Interface Board mounting bracket to the printer frame.
4. Remove the Engine Control Interface Board and mounting bracket from the printer frame

### Method #2

1. Lower the HVPS assembly to a horizontal position.
2. Disconnect the eight wiring harnesses.

**Note** Two connectors (J537, J536) have locks to release before pulling on the harnesses.

3. Remove the two screws that secure the Engine Control Interface Board mounting bracket to the printer frame.
4. Remove the Engine Control Interface Board and mounting bracket from the printer frame

Reverse these steps to install the Engine Control Interface Board.

**Note** Ensure that the interface board is reinstalled as high up as possible to ensure full contact (properly seated).

# RRP 44 T1 and T3 High-voltage Power Supplies

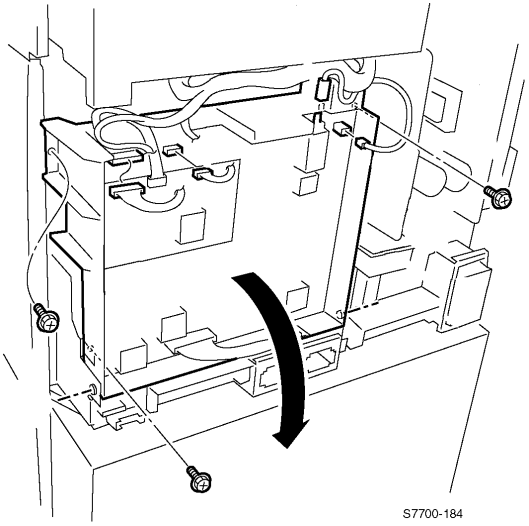


**Figure 7-50 T1 and T3 High-voltage Power Supplies**

## Removal

1. Remove rear cover and shield (RRP 9, on page 7-163).

**Note** Do not disconnect the T1 wire harness at P572 (blue connector).

1. Disconnect the wiring harness at P/J501 and P/J574.
2. Disconnect the high-voltage wires to the Transfer Roller and at DTS (J801).
3. Remove the three screws that secure the high-voltage power supply assembly to the printer frame and tilt the entire high-voltage assembly down.

**Note** If complete removal is **not required,** there is a restraining strap on the back side of the assembly to hold the assembly in a horizontal position.

4. Disconnect the T1 high-voltage wire harness at P580 and remove the wiring harness from the clip grommet.
5. Disconnect the T3 high-voltage wire harness at P581 and remove the wiring harness from the clip grommet.
6. Remove the high-voltage power supply assembly.
7. Disconnect the interconnecting wiring harness at P573 on the T3 power supply board.
8. Remove the appropriate power supply board(s) from the assembly.

## Replacement

**Note** Connect the high-voltage 2nd BTR and P/J 801 wires before securing the assembly to the printer to ensure they are not forgotten.

**Note** The grounding point requires the chrome plated screw (not a black screw).

# RRP 45 3.3 VDC and 5 VDC Low-Voltage Power Supplies and Bracket

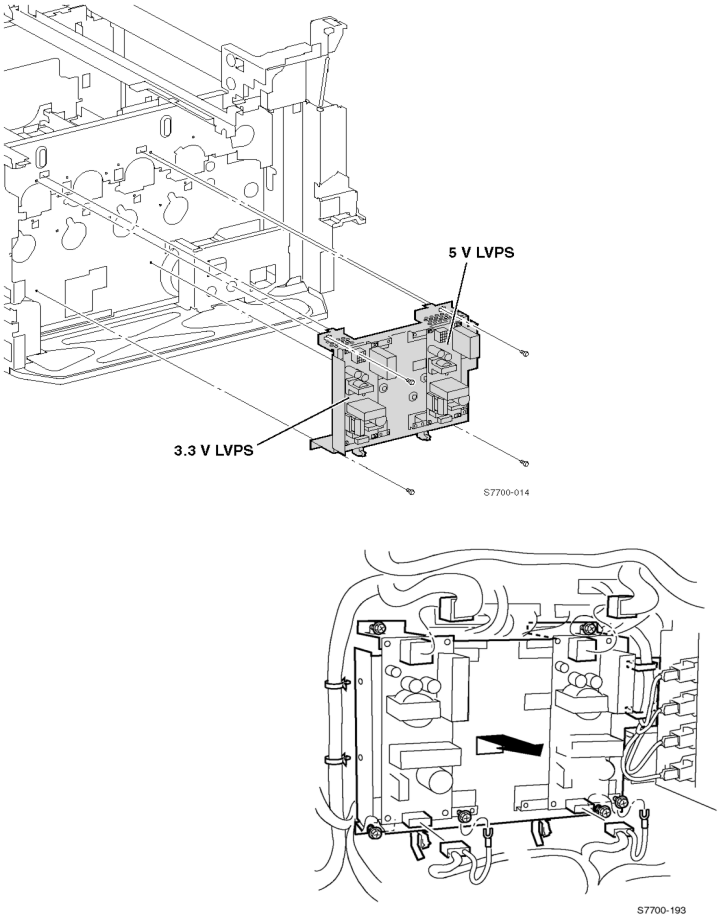


**Figure 7-51 3.3 VDC and 5 VDC Low-Voltage Power Supplies**

## Removal

**Note** If removing only one of the low-voltage power supplies, disconnect the associated wiring harness from the printer, and remove the 4 screws that secure the low-voltage power supply to the mounting bracket.

1. Lower the T1 and T3 power supply to horizontal (RRP 44, on page 7-208).
2. Disconnect P/Js 8, 12, 15 & 16 from the low-voltage power supplies.
3. Loosen the four screws the secure the mounting bracket to the frame.
4. Lift the bracket up and out to remove.

# RRP 46 LD Power Relay

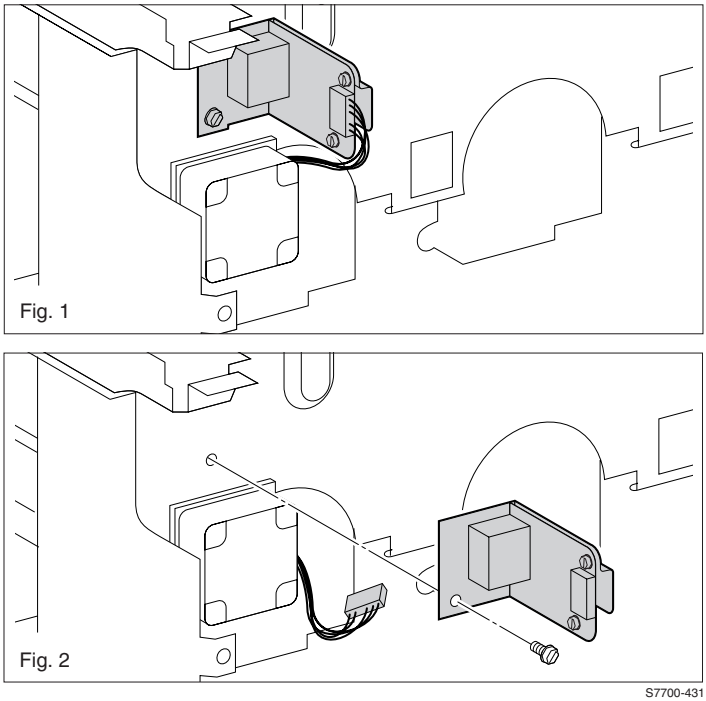


**Figure 7-52 LD Power Relay**

## Removal

1. Remove rear cover and shield (RRP 9, on page 7-163).
2. Disconnect the wiring harness.
3. Remove the two screws securing the LD power assembly.
4. Remove the LD power assembly.

# RRP 47 +24 VDC Low-voltage Power Supply, Fan and Bracket

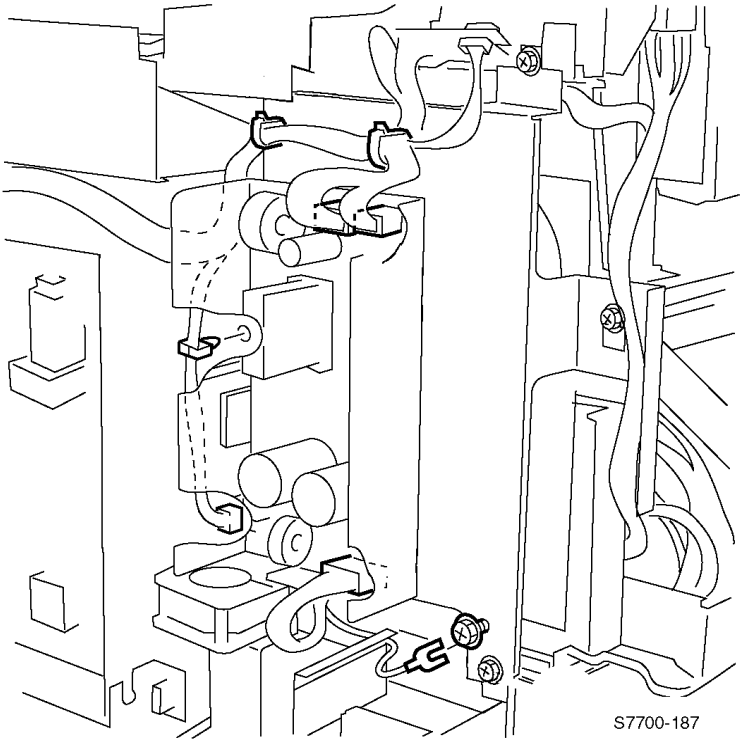


**Figure 7-53 Low-voltage Power Supply, Fan and Bracket**

## Removal

1. Remove the rear cover and +24 VDC shield (RRP 11, on page 7-165).
2. Remove the Top Power Switch Cover, Left-Hand Power Switch and Left-Hand Rear Mid Covers (RRP 6, on page 7-160).

**Note** If only the power supply needs to be removed, disconnect the wiring harness and loosen the 2 screws that secure the power supply to the PS mounting bracket.

3. Disconnect the wiring harness at P502, P505, and P2 from the +24 VDC power supply and the fan motor wiring harness P214.
4. Remove the 1 screw at the top of the bracket and loosen the remaining four screws in slots.
5. Remove the power supply and bracket assembly.

# RRP 48 T2 High-Voltage Power Supply

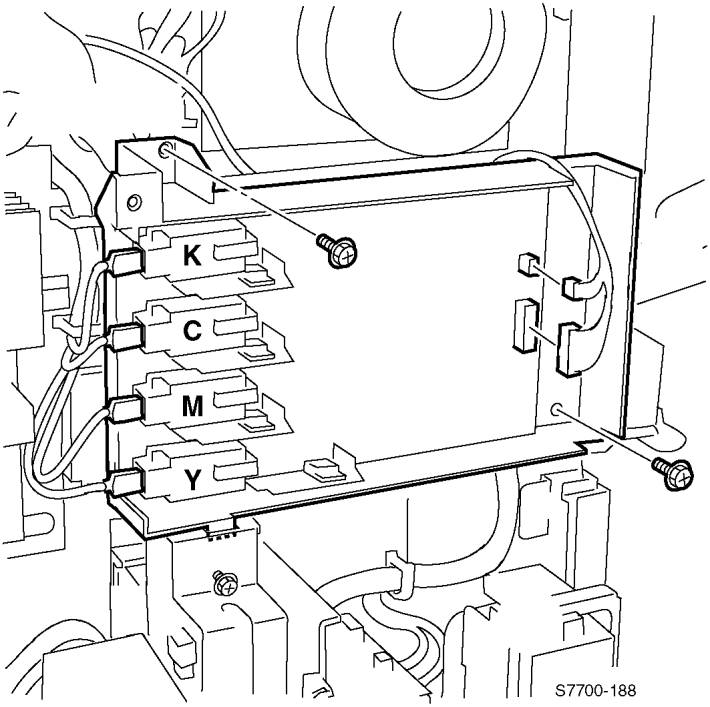


**Figure 7-54 T2 High-Voltage Power Supply**

## Removal

1. Remove the +24 VDC Power Supply and Bracket (RRP 11, on page 7-165).
2. Disconnet the high-voltage wires from the KCMY connectors.
3. Disconnect the wiring harness from J575 and J576.
4. Remove the two screws that secure the 1st BTR assembly to the printer frame.
5. Remove the T2 High-Voltage Power Supply.

# RRP 49 Chassis AC Power Assembly

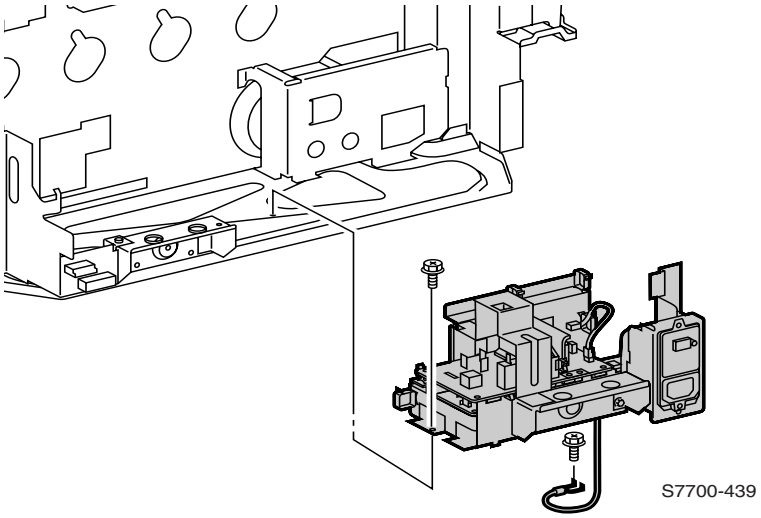


**Figure 7-55 Chassis AC Power Assembly**

## Removal

**Note** AC power (consists of the AC drive, noise filter and GFI assemblies and mounting bracket.

1. Remove the T2 high-voltage power supply (RRP 48, on page 7-213).
2. Remove T1 and T3 power supply assembly (RRP 44, on page 7-208).
3. Disconnect the wiring harnesses P15 and P16, the AC drive wiring harness P43 and the individual wires at J39- J40, J41 and J47 of the AC drive board.
4. Disconnect the AC wires from P15 and P16 on the Noise Filter board.
5. Clear the wiring harnesses from their retaining clips.
6. Remove the seven screws securing the Chassis Assembly to the printer frame.
7. Remove the complete assembly from the printer frame.

# RRP 50 Main Drive Assembly

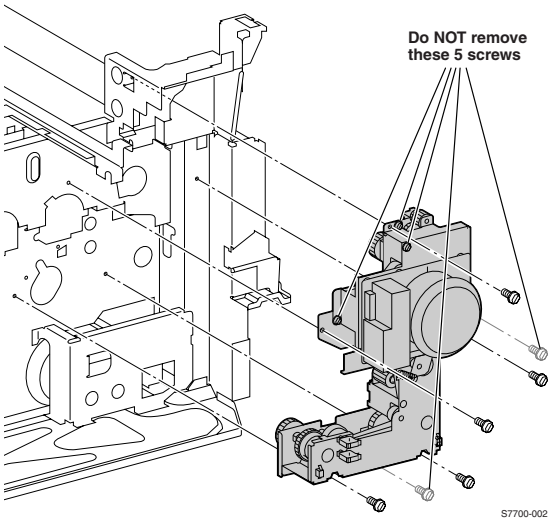


**Figure 7-56 Main Drive Assembly**

## Removal

1. Remove the Fuser (RRP 18, on page 7-173).
1. Remove the Multi-Purpose Tray (RRP 12, on page 7-166).
2. Remove the T2 high-voltage power supply (RRP 48, on page 7-213).
3. Disconnect the wiring harness.

**Note** There are 5 brass screws that hold the main drive assembly together. DO NOT remove these screws.

4. Remove the five black screws that secure the complete main drive assembly to the printer frame.
5. Lift the complete main drive assembly up and out of the printer.

**Note** When reinstalling, rotate the main drive to ensure the gears move freely. Remove the Fuser unit to give better visiblility.

**Note** As the main drive assembly is being installed into position, make sure the gears are meshed with the mating gears by slightly rotating the main motor until the main motor bracket seats without stress, and flat against the frame. Rotate the main drive after installing the assembly to ensure it rotates freely, and ensure it is FLAT against the frame. It is easy to pinch or short wires under the main drive assembly bracket.

Make sure that the red Bias Transfer Roller wire is connected near the right side of the main drive assembly to its mating connector on the frame.

# RRP 51 Accumulator Belt Drive Assembly

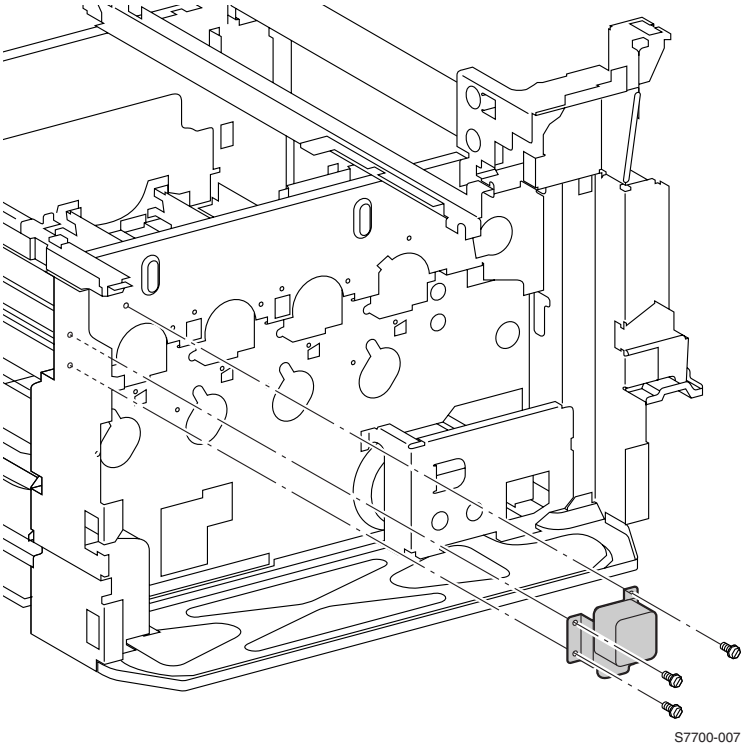


**Figure 7-57 Accumulator Belt Drive Assembly**

## Removal

1. Remove the Rear Cover and Shield (RRP 9, on page 7-163).
2. Lower the T1 and T3 power supply to horizontal (RRP 44, on page 7-208).
3. Remove any components covering the motor which is mounted to the frame at the rear, top left corner.
4. Remove the three screws that secures the motor and bracket assembly to the frame and remove the assembly.

# RRP 52 Developer Drive Assembly

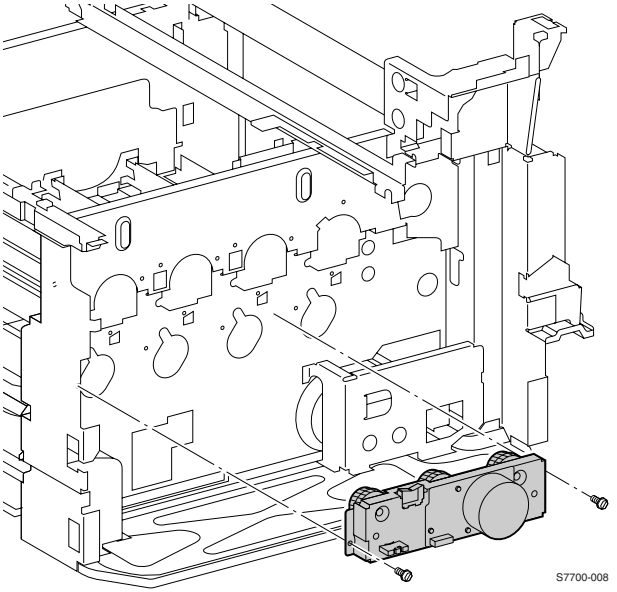


**Figure 7-58 Developer Drive Assembly**

## Removal

1. Remove the 3.3 VDC and 5 VDC Power Supply and bracket assembly (RRP 45, on page 7-210).
2. Disconnect the wiring harness from the Developer Drive Assembly.
3. Clear the high-voltage lines.
4. Remove the two black screws securing the Developer Drive Assembly to the printer frame and remove from the printer.

**Note** When reinstalling, rotate the main drive to ensure the gears move freely.

# RRP 53 Print Cartridge Drive Assembly

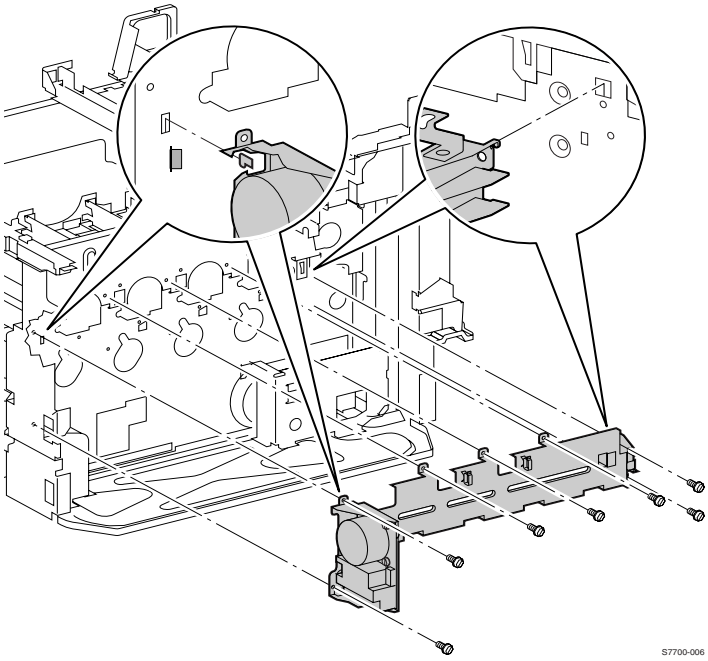


**Figure 7-59 Print Cartridge Drive Assembly**

## Removal

1. Remove the Rear Cover Assembly (RRP 1, on page 7-154).
2. Remove the Right Cover Assembly (RRP 2, on page 7-155).
3. Remove the 3.3 VDC and 5 VDC Low-voltage Power Supply Bracket Assembly (RRP 45, on page 7-210)
4. Remove the 24 VDC Low-voltage Power Supply (RRP 47, on page 7-212).
5. Remove the T2 High-voltage Power Supply (RRP 48, on page 7-213).
6. Disconnect the wiring harness to the Print Engine Drive Assembly.
7. Remove the two screws securing the finisher connector (now accessible after removing the Right Cover Assembly) and let it hang loose.
8. Remove the screw that is accessible through the frame access hole near the finisher connector (now accessible after removing the Right Cover Assembly).
9. Remove the remaining seven screws that secure the Print Cartridge Drive Assembly to the printer frame.
10. Lift the Print Cartridge Drive Assembly up and out of the printer.

# RRP 54 Tray 1 Paper-Select Switches

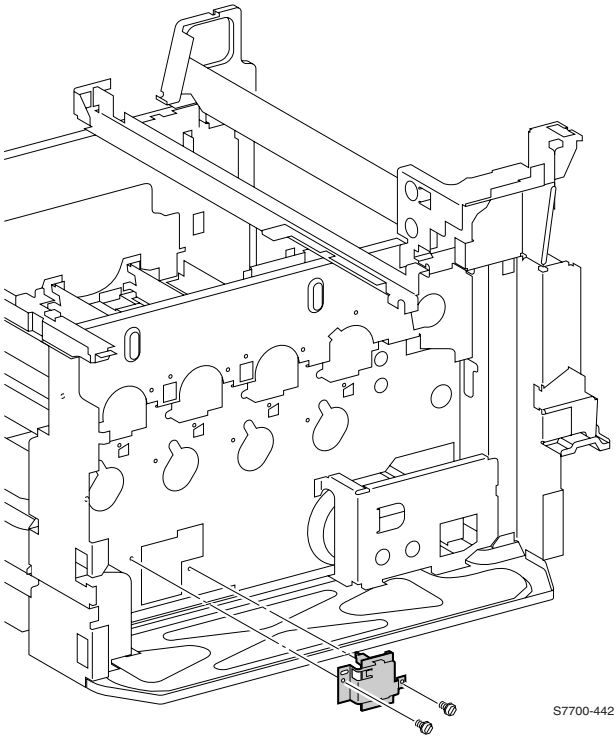


**Figure 7-60 Tray 1 Paper-Select Switches**

1. Remove the T1 and T3 high-voltage power supply (RRP 44, on page 7-208).
1. Remove the 3.3 VDC and 5 VDC low-voltage power supply (RRP 45, on page 7-210).
2. Disconnect the wiring harness from the tray 1 paper-select switches.
3. Remove the two screws that secure the mounting bracket to the printer frame and remove the switch.

# RRP 55 Main Lever Assembly Right and Left-Hand Jacks

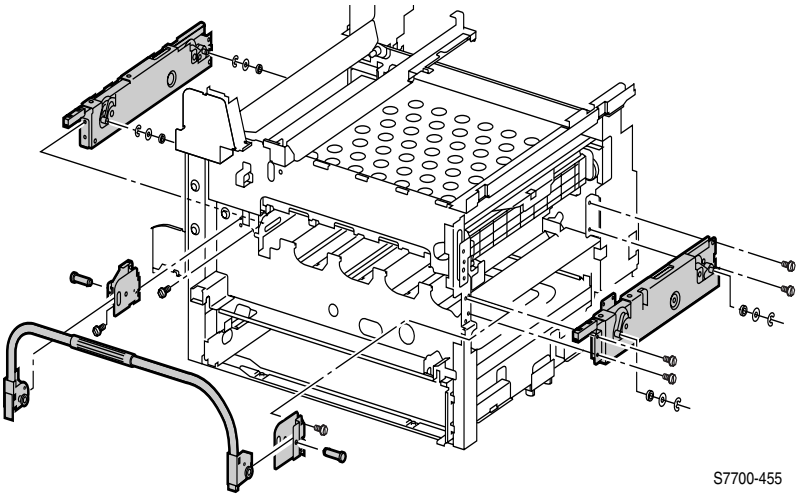


**Figure 7-61 Main Lever, Right-Hand and Left-Hand Jacks**

## Removal - Main Lever Assembly

1. Remove the Accumulator Belt Assembly (RRP 35, on page 7-196).
2. Remove the Print Cartridges and protect from the light.
3. Remove Fuser Front Cover (RRP 8, on page 7-162).
4. Remove the Left-Hand Cover Assembly (RRP 14, on page 7-168).
5. Lower the Main Lever Assembly to fully horizontal.
6. Remove the e-clip and remove the RH Handle Pivot Pin.
7. Remove the screw and washer and remove the RH Handle Pivot Pin.
8. Remove the Main Lever Assembly.

## Removal - RH Jack Assembly

**Caution** Ensure that the Lift Frame Assembly is fully lifted and the RH and LH Lift Jack Assembly racks are even.

1. Hold the Main Lever in a horizontal position.
2. Slide the Main Lever gears under the Lift Jack Assembly racks and lift into position.
3. Insert the clevis pins.
4. Remove RH Cover Assembly (RRP 2, on page 7-155).
5. Remove the Main Lever.
6. Remove the e-clips and washers from the RH Lift Jack Assembly roller guides.
7. Remove the four screws that hold the RH Lift Jack Bracket and remove the bracket.

8. Remove the two screws holding the Waste Auger Assembly.
9. Remove the four screws holding the RH Lift Jack Bracket and remove from the printer.

**Note** When reinstalling the RH Lift Jack Assembly install the screws as follows: Upper Left, Upper Right, then the lower screws.

**Note** When reinstalling the RH Lift Jack Assembly ensure that the Jack racks protrude evenly before returning the Main Lift Lever to its upright position.

### Removal - LH Lift Jack Assembly

1. Remove the Accumulator Belt Assembly (RRP 35, on page 7-196).
2. Remove the Print Cartridges and protect from the light.
3. Remove the Main Lever Assembly only on the LH side (RRP 55, on page 7-221).
4. Remove the LH Lever Hinge.
5. Use a stubby screwdriver.
6. Remove the Transport Registration Assembly (RRP 20, on page 7-175).
7. Remove the Mark-On-Belt (MOB) Sensor Assembly (RRP 32, on page 7-191).
8. Reach inside the LH cover cavity and remove the black print cartridge rail by pushing on the rail slot while pulling on the rail.

**Caution** Cover the developers with multiple sheets of stiff paper or cardboard to prevent damage to the developer rollers and to catch e-clips and washers loosened in the next step.

9. Remove the Fuser Assembly, then remove the catch tray mounted on the Accumulator Belt Assembly.
10. Remove the e-clips and washers from the LH Lift Jack Assembly roller guides.
11. Remove the four screws that hold the LH Lift Jack Bracket and remove the bracket.
12. Remove the four screws holding the LH Lift Jack Bracket and remove from the printer.

**Note** When reinstalling the LH Lift Jack Assembly, install the screws as follows: Upper Front, Upper Rear, then the lower screws.

**Note** When reinstalling the RH Lift Jack Assembly, ensure that the Jack racks protrude evenly before returning the Main Lift Lever to its upright position.

## Aligning Lift Jack Assembly Gears

Visually examine both ends of the Accumulator Belt Assembly or Belt Lift Frame Assembly while operating the Lift Handle to determine if the left or right end is out of alignment. Then follow the applicable procedure in Main Lever Assembly Right and Left-Hand Jacks on page 7-221 to remove the affected Lift Jack Assembly. Once the assembly is removed, check the alignment of the Lift Pins as shown in Figure xyz. The center of both Pins should be the same distance from the bottom of the assembly.

**Figure 7-62 Lift Pin Alignment**

If the Lift Pins are misaligned, follow this procedure to realign the individual Gears with the Rack.

1. Remove the 8 cover screws from the Lift Jack Assembly.

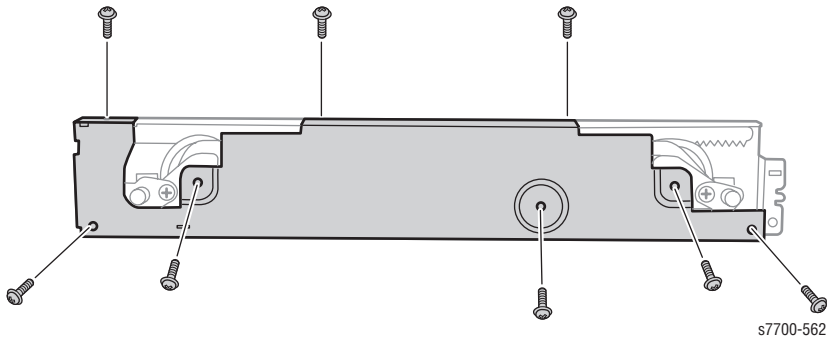


**Figure 7-63 Cover Screw Location**

2. Flip open the Cover Plate.

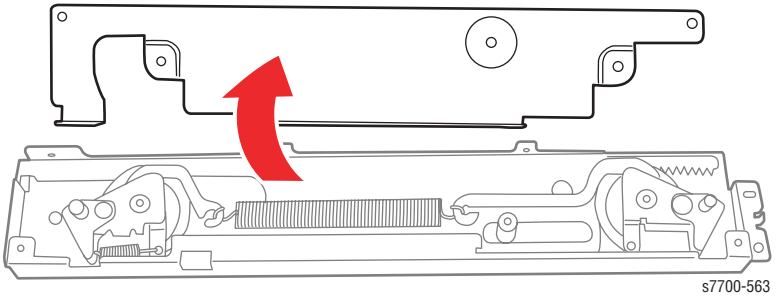


**Figure 7-64 Cover Removed**

3. Remove the tension spring.

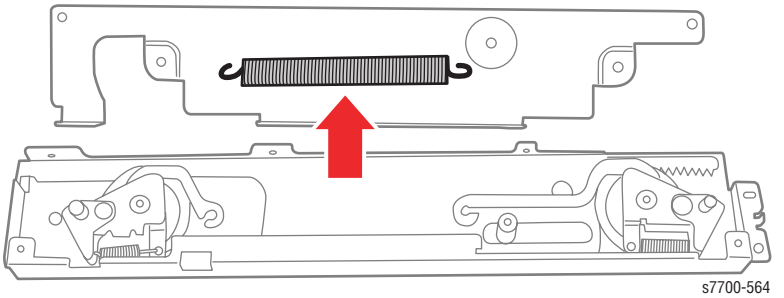


**Figure 7-65 Tension Spring Location**

4. Align the triangle marks on the Gears and the Rack by lifting the Gear Assemblies on their mounting posts until they disengage from the rack and rotating them until the triangles align. Reseat the Gear fully on its post.

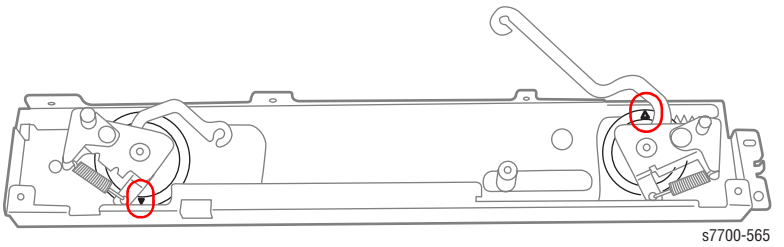


**Figure 7-66 Front and Rear Gears Aligned**

# RRP 56 Auxiliary Feeder Covers

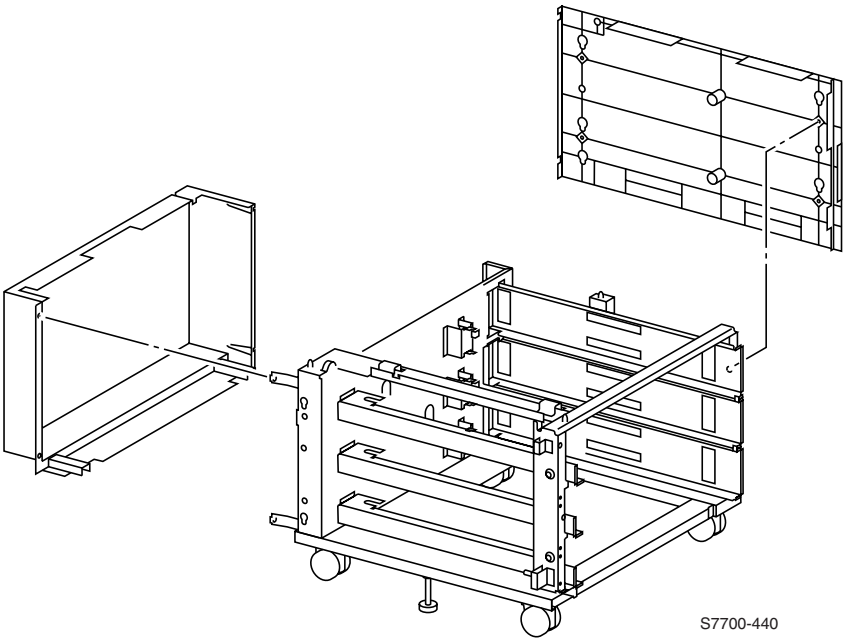


**Figure 7-67 Auxiliary Feeder Covers**

## Left Side Door

1. Remove the four screws securing the left-hand outer cover and remove.
2. Remove the screws securing the straps.
3. Remove the one screw holding the front side pivot bracket and remove the left-hand door.

## Rear Cover

1. Remove the four screws securing the cover.
2. Remove the Rear Cover.

# RRP 57 Auxiliary Feeder Cover Assembly

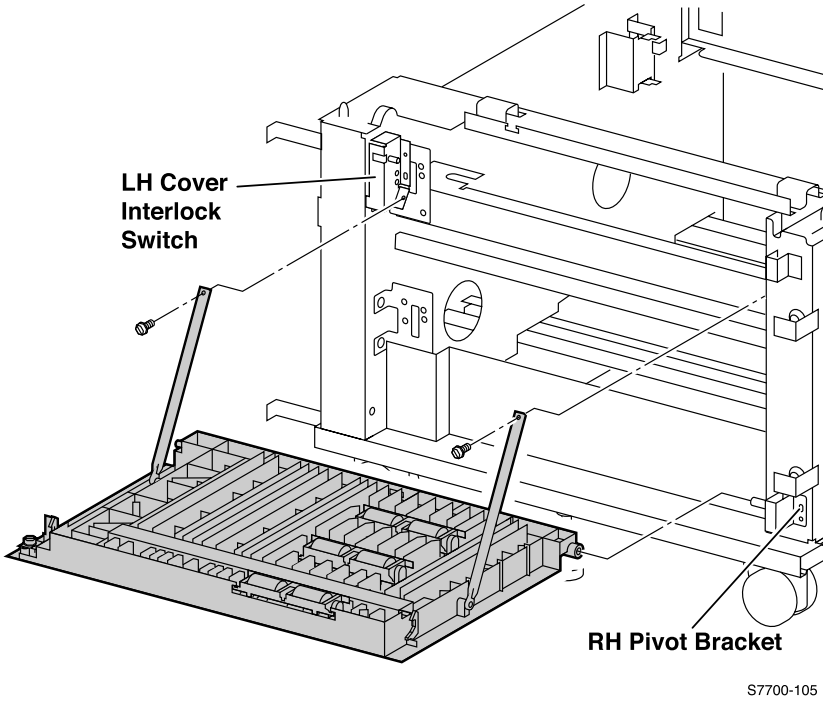


**Figure 7-68 High-Capacity Feeder (HCF) Cover Assembly**

## Removal

1. Open the High-Capacity Feeder (HCF) Cover Assembly.
2. Remove one screw from each of the support straps.
3. Remove one screw from the cover's right-hand pivot bracket.
4. Remove the cover assembly from the left-hand pivot.

# RRP 58 High-Capacity Feeder (HCF) Tray 3

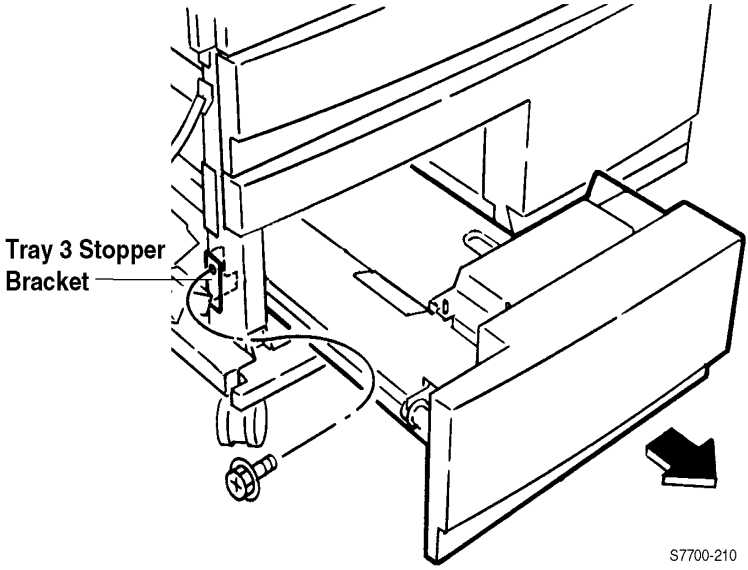


**Figure 7-69 High-Capacity Feeder (HCF) Tray 3**

## Removal

1. On the left side of the HCF, remove one screw from the Tray 3 Stopper bracket and remove the bracket.
2. Pull Tray 3 out of the printer.

# RRP 59 High-Capacity Feeder (HCF) Tray 4 and Paper Transport

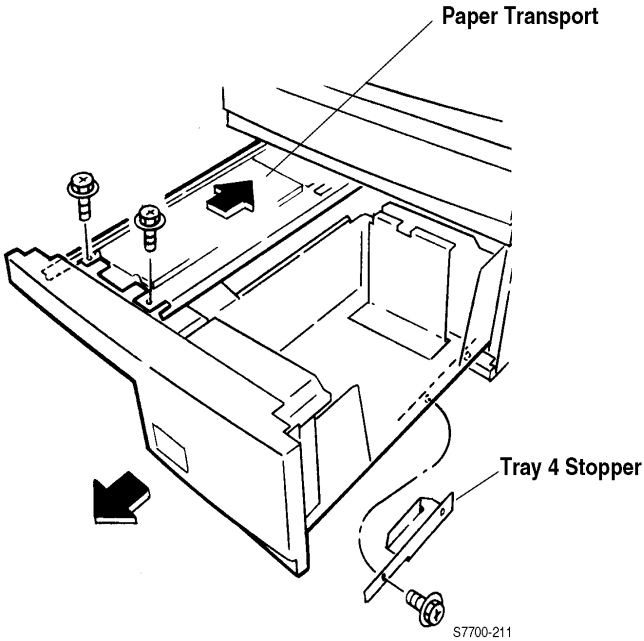


**Figure 7-70 High-Capacity Feeder (HCF) Tray 4 and Paper Transport**

## Removal

1. Open Tray 4.
2. Remove the two screws that secure the Tray 4 Stopper.
3. Remove the two screws securing the paper transport, and slide it back in.
4. Pull Tray 4 out of the printer.

# RRP 60 Auxiliary Feeder Control Boards

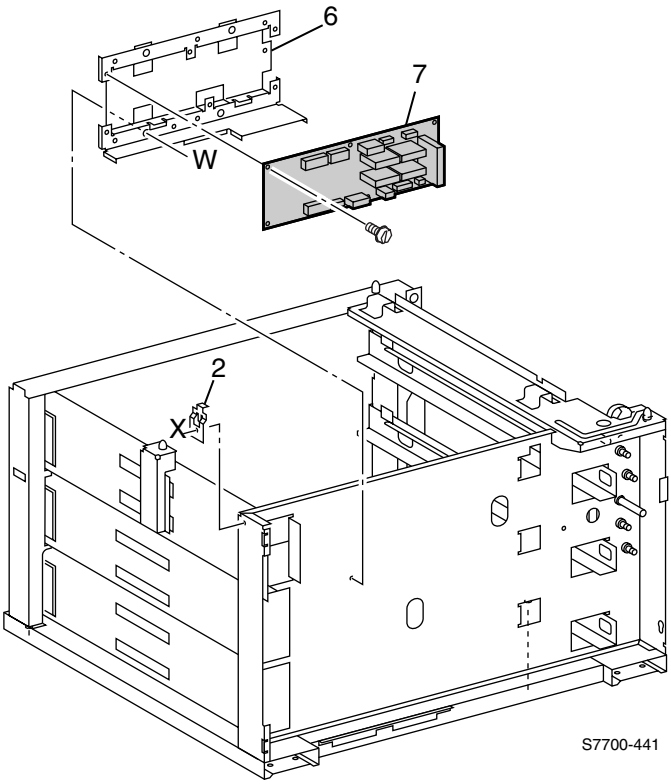


**Figure 7-71 LTD Control or HCF Control Board**

## Removal

1. Remove the Rear Cover (RRP 1, on page 7-154).
2. Disconnect the wire harnesses.
3. Remove the four screws securing the control board and remove the board.

# RRP 61 Auxiliary Feeders Motor Assemblies

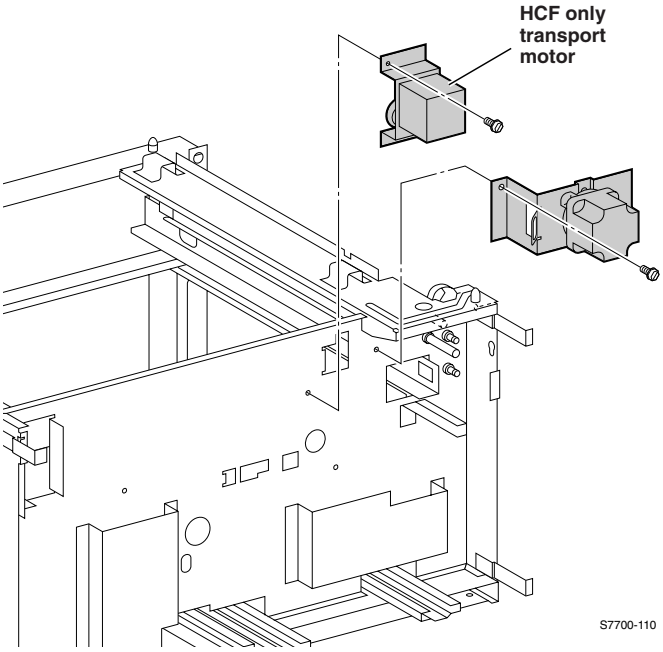


**Figure 7-72 Transport Motor Assembly**

## Removal

1. Remove Rear Cover (RRP 1, on page 7-154).
2. Disconnect the wire harness.
3. Remove the two screws securing the motor assembly.
4. Remove the motor assembly.

# RRP 62 Auxiliary Feeder Paper-Select Switches

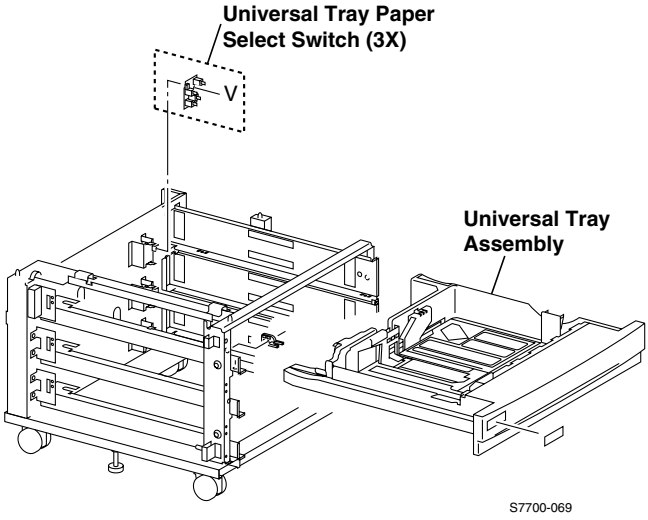


**Figure 7-73 Paper-Select Switches**

## Removal

1. Remove the Paper Tray.
2. Reaching inside the cabinet, disconnect the wire harness.
   LTD: 3 places.
   HCF: 1 place
3. Reaching inside the cabinet, remove the 1 screw that secures the Paper-Select Switch.
   LTD: 3 places.
   HCF: 1 place

# RRP 63 Auxiliary Feeder Paper Feed Motor Assembly

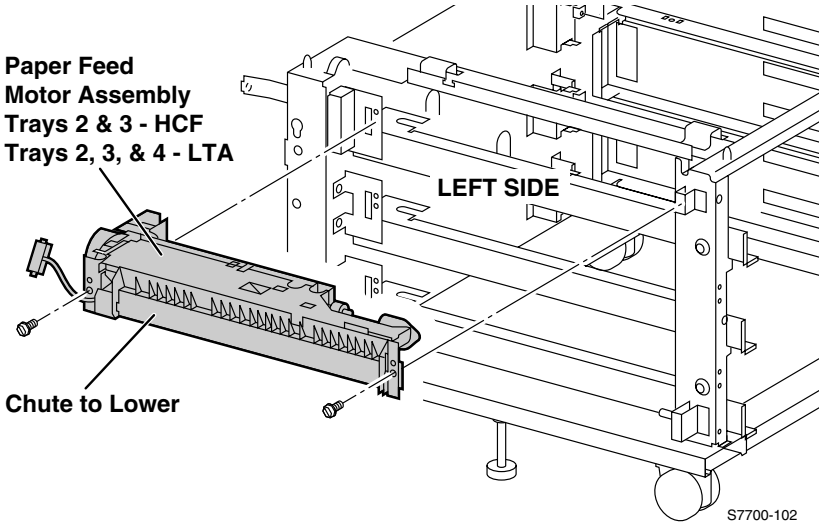


**Figure 7-74 Paper Feed Motor Assembly and Chute (LTA & HCF)**

## Removal

1. Remove the Left-Hand Cover.
2. Open the Tray halfway.
3. Disconnect the wiring harness.
4. Remove the two screws holding the Tray 1 feeder assembly, not the screws securing the lower tray bracket.
5. Remove the Tray feeder assembly.

**Note** Some wiggling may be required to disengage the gears.

## Removal of the Motor

1. Disconnect the wiring harness from the motor.
2. Remove the two screws securing the motor to the feeder bracket.
3. Lift the motor straight out of the bracket to clear the gear on the motor shaft.

**Note** When reinstalling the motor, it may be necessary to manually rotate the gears to mesh them with the other gears.

# RRP 64 Bracket Assembly, Left-Hand and Right-Hand Gear (HCF)

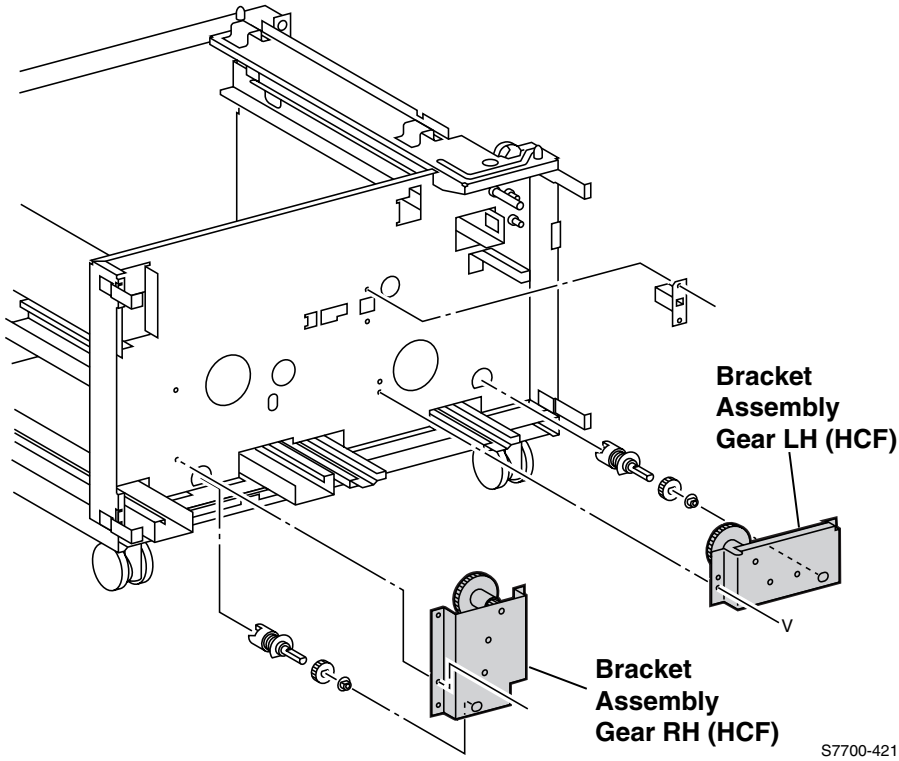


**Figure 7-75 Bracket Assembly, Gear RH & Gear LH (HCF)**

## Removal

1. Remove the Rear Cover (RRP 1, on page 7-154).
2. Remove the two screws securing the Bracket Assembly (Gear RH or Gear LH) to the frame.
3. Remove the Bracket Assembly.

## Replacement

**Note** There are locating pins for each Bracket.

# FRU Parts List

This topic provides a list of Field Replaceable Units (FRUs) for the Phaser 7700 Color Laser Printer.

Changes to Xerox products are made to accommodate improved components as they become available. It is important when ordering parts to include the following information:

- Component's part number
- Product type or model number
- Serial number of the printer

**Serial Numbering:** Particular fields in the serial number indicate the modification level of the printer, the date of its manufacture and the sequence number of the printer produced on that day. The serial number is coded as follows:

J*LxxDMY*

J indicates the headquarter country of the manufacturing company, Japan.

*L* indicates the modification level of the printer, ranging alpha-numerically from
0 to Z.

*xx* alpha-numerically indicates the sequence of the printer among the printers produce on that day of manufacture, ranging from 01 to ZZ representing 1 to 1155 (the letters I and O are not used).

*D* alpha-numerically indicates the day of manufacture, ranging from 1 to X representing 1 to 31 (the letters I and O are not used).

*M* alpha-numerically indicates the month of manufacture, ranging from 1 to C representing 1 to 12.

*Y* numerically indicates the last digit of the year of manufacture, ranging from 0 to 9.

# PL 8-1 Accumulator Belt FRUs

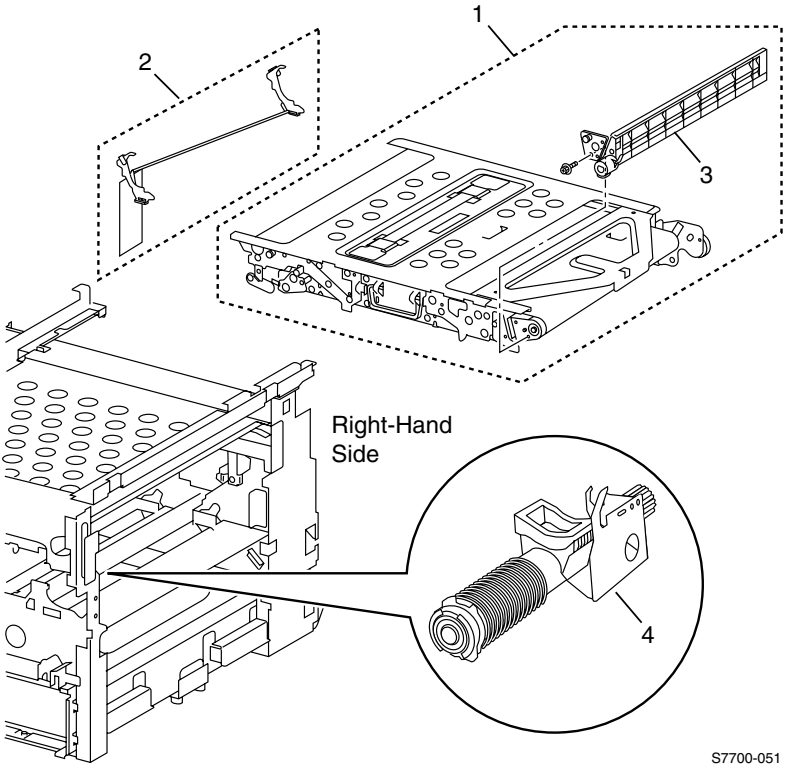


**Figure 8-1 Accumulator Belt FRUs**

**Table 8-1 Accumulator Belt FRUs List**

| Parts | Part Number | Qty | Name and Description (vendor description) |
|---|---|---|---|
| 1 | 016-1889-00 | 1 | Accumulator Belt/cleaner Assembly Kit (Belt Assembly - IBT) |
| 2 | 116-1207-00 | 1 | Accumulator Belt Shipping Restraint |
| 3 | 116-1094-00 | 1 | Belt Cleaner Assembly (Cleaner Assembly IB) |
| 4 | 116-1180-00 | 1 | Waste Auger Assembly |

# PL 8-2 Left-Hand Door FRUs

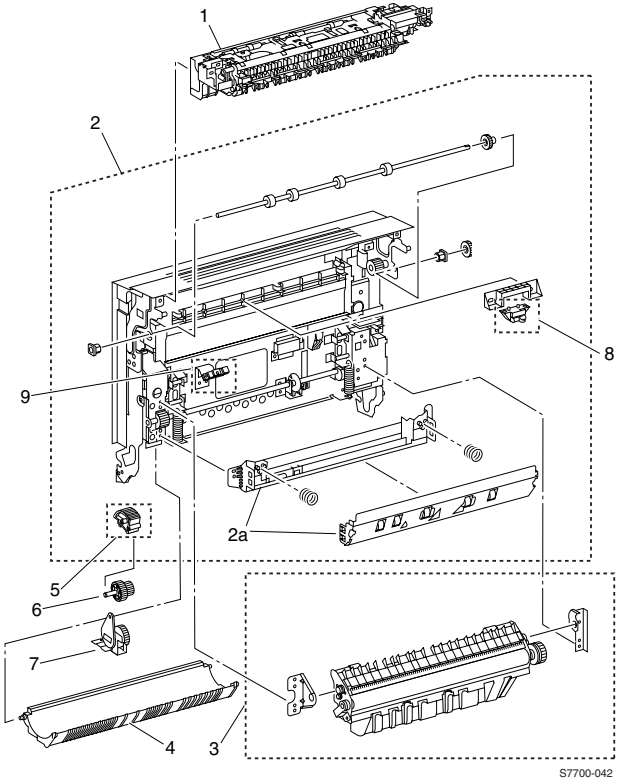


**Figure 8-2 Left-Hand Door FRUs**

**Table 8-2 Left-Hand Door FRUs List**

| Parts | Part Number | Qty | Name and Description (vendor description) |
|---|---|---|---|
| 1 | 116-1161-00 | 1 | Transport Assembly, Inverter |
| 2<br>2a | 116-1182-00<br>116-1317-00 | 1<br>1 | Regi. Chute Assembly<br>Left-Hand Cover only (Cover Assembly-L/H2) |
| 3 | 016-1890-00 | 1 | Transfer Roller (Roll Assembly 2nd E) |
| 4 | 116-1098-00 | 1 | Duplex Chute (DUP Chute) |
| 5 | 116-1542-00 | 1 | Damper, 1/2 Gear |
| 6 | 116-1540-00 | 1 | Damper, Gear |
| 7 | 116-1541-00 | 1 | Damper |
| 8 | 116-1543-00 | 1 | Switch, Fuser Exit |
| 9 | 116-1544-00<br>830E62811<br>(compatible with Phaser 7760) | 1 | Sensor, Paper on Belt<br>Sensor Bracket |

# PL 8-3 Media Trays FRUs

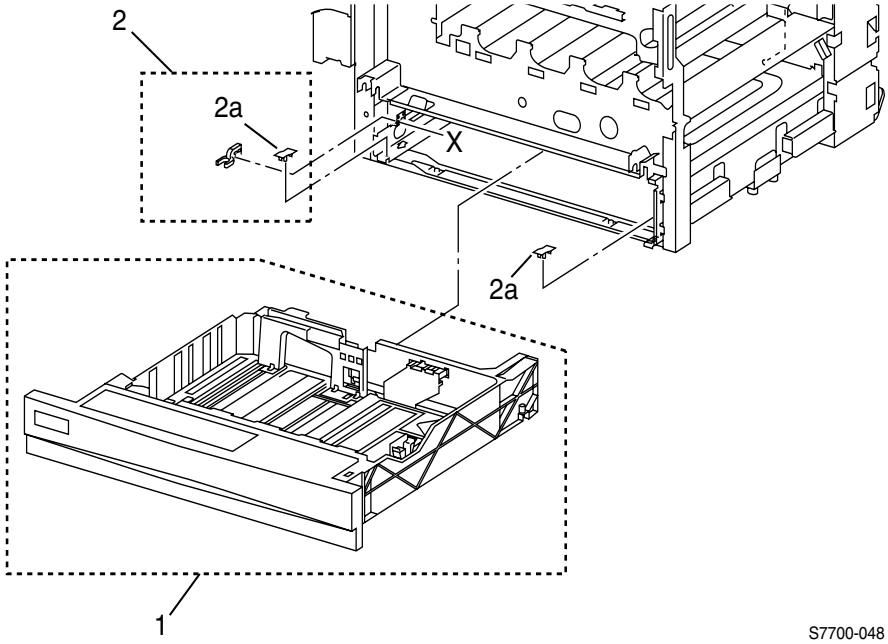


**Figure 8-3 Media Trays FRUs**

**Table 8-3 Media Trays FRUs List**

| Parts | Part Number | Qty | Name and Description (vendor description) |
|---|---|---|---|
| 1 | 116-1091-00 | 1 | Universal Paper Tray |
| 2<br>2a | 116-1093-00 | 1<br>2 | Universal Paper Tay Stopper<br>Spacer |

# PL 8-4 Duplex Unit FRUs

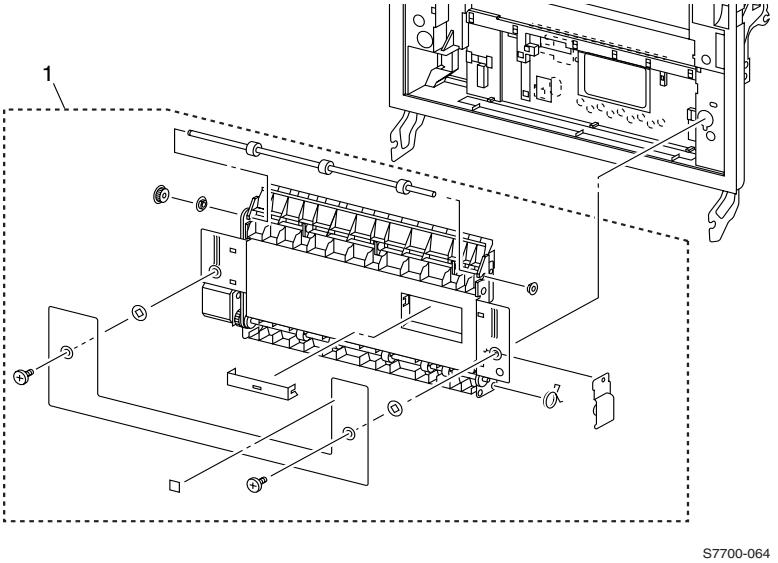


**Figure 8-4 Duplex Unit FRUs**

**Table 8-4 Duplex Unit FRUs List**

| Parts | Part Number | Qty | Name and Description (vendor description) |
|---|---|---|---|
| 1 | 116-1097-00 | 1 | Duplex Unit (Transport Assembly - DU) |

# PL 8-5 Cover FRUs

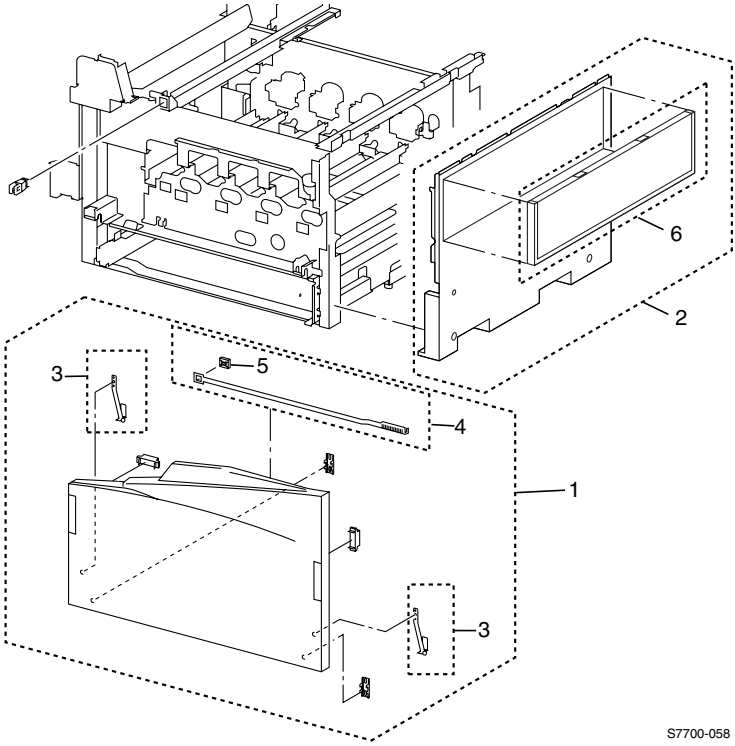


**Figure 8-5 Cover FRUs**

**Table 8-5 Cover FRUs List**

| Parts | Part Number | Qty | Name and Description (vendor description) |
|---|---|---|---|
| 1 | 116-1178-00 | 1<br>1<br>2<br>2<br>1<br>1<br>1<br>1<br>1 | Front Cover Assembly (Cover Assembly Front)<br>Front Cover<br>Magnet<br>Strip<br>Rod Cleaner Assembly<br>Rod Cleaner<br>Cleaner Base<br>Label<br>Label |
| 2 | 116-1095-00 | 1 | Right Cover (Cover Assembly - R MN) |
| 3 | 116-1187-00 | 1 | Front Cover Strap (Strip) |
| 4 | 116-1116-00 | 1 | Laser Lens Cleaner Assembly (Cleaner Rod Assembly) |
| 5 | 116-1117-00 | 1 | Laser Lens Cleaner Base (Cleaner Assembly Base) |
| 6 | 116-1317-00 | 1 | Cover Assy LH PH2 |

# PL 8-6 Cover FRUs (cont'd.)

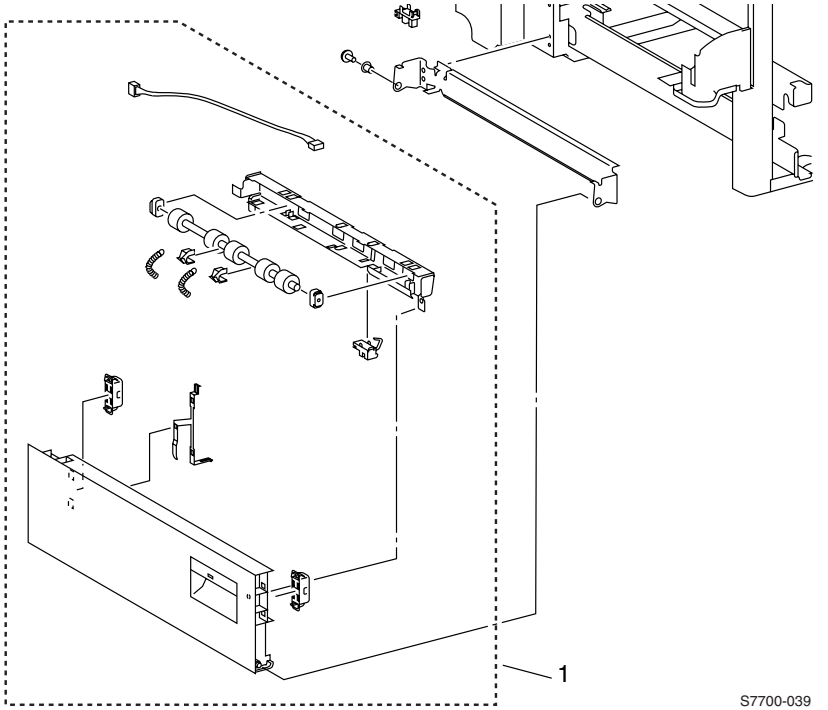


**Figure 8-6 Cover FRUs (cont'd.)**

**Table 8-6 Cover FRUs (cont'd.) List**

| Parts | Part Number | Qty | Name and Description (vendor description) |
|---|---|---|---|
| 1 | 116-1181-00 | 1 | LH Lower Cover Assembly (Cov Assembly-LH Low) |
| | | 1 | LH Lower Cover |
| | | 1 | Earth Plate |
| | | 2 | Magnet |
| | | 1 | Pinch Roll Assembly |
| | | 1 | Bracket |
| | | 2 | Spring |
| | | 1 | Pinch Roller |
| | | 1 | Bearing |
| | | 1 | Bearing |
| | | 2 | Bearing |
| | | 1 | Tray 1 Feed Out Sensor |
| | | 1 | Wire Harness |
| | 029E31600 (compatible with Phaser 7760) | 2 | Rivet |

# PL 8-7 Cover FRUs (cont'd.)

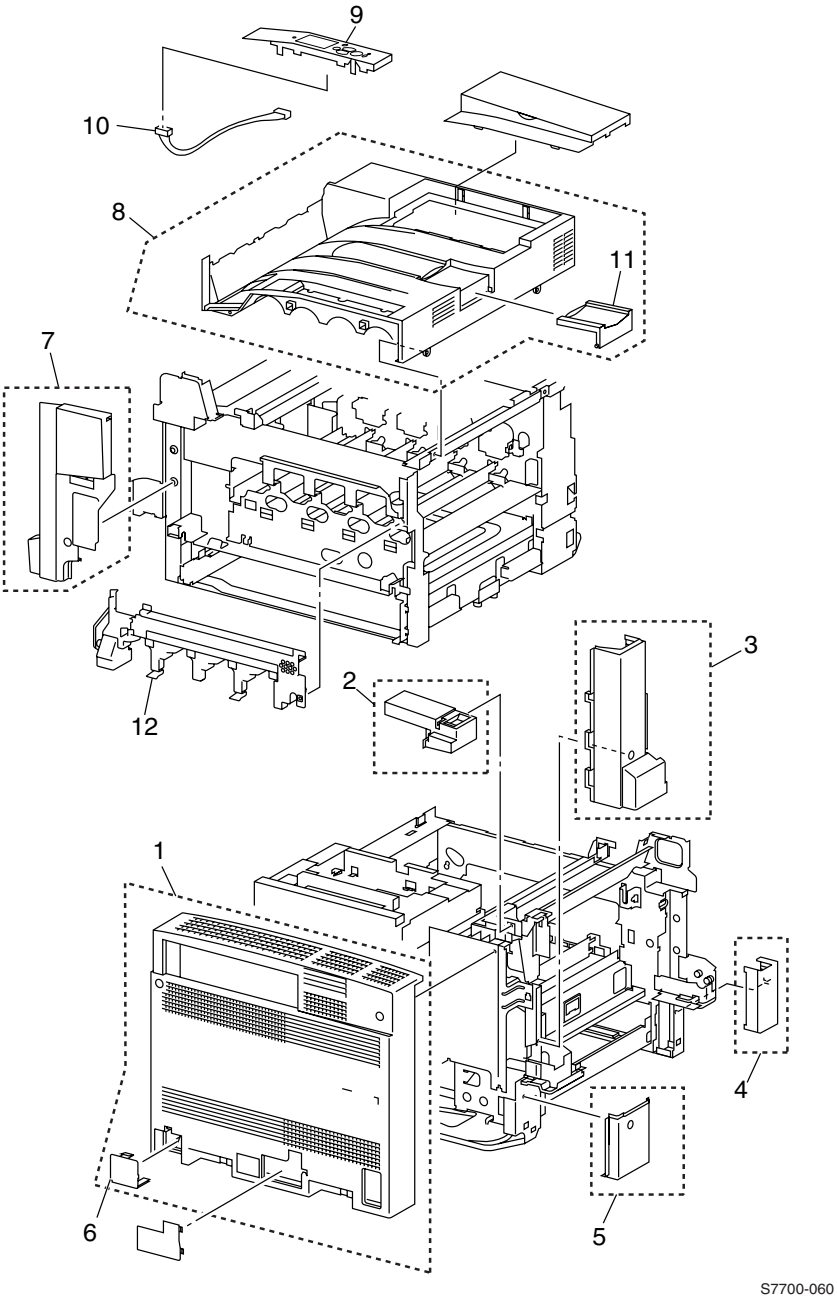


**Figure 8-7 Cover FRUs (cont'd.)**

**Table 8-7 Covers FRUs List (cont'd.)**

| Parts | Part Number | Qty | Name and Description (vendor description) |
|---|---|---|---|
| 1 | 116-1179-00 | 1<br>1 | Rear Cover Assembly (Cover Assembly Rear)<br>Blind Cover |
| 2 | 116-1190-00 | 1 | Cover, Top Rear ps (Cover Top Rear) |
| 3 | 116-1189-00 | 1 | Cover, LH Rear Mid |
| 4 | 116-1193-00 | 1 | Cover, LH Front Low |
| 5 | 116-1191-00 | 1 | Cover, LH Rear Low |
| 6 | 116-1188-00 | 1 | Tray Module Connector Cover (Cover - Blind, TM) |
| 7 | 116-1194-00 | 1 | Fuser Front Cover |
| 8 | 116-1319-00 | 1 | Top Cover |
| 9 | 116-0001-02 | 1 | Front Panel (Control Panel) |
| 10 | 116-0002-00 | 1 | Control Panel Wiring Harness |
| 11 | | 1 | Top Cover Stopper |
| 12 | | 1 | Print Cartridge Plate Cover |

# PL 8-8 Switch and Sensor FRUs

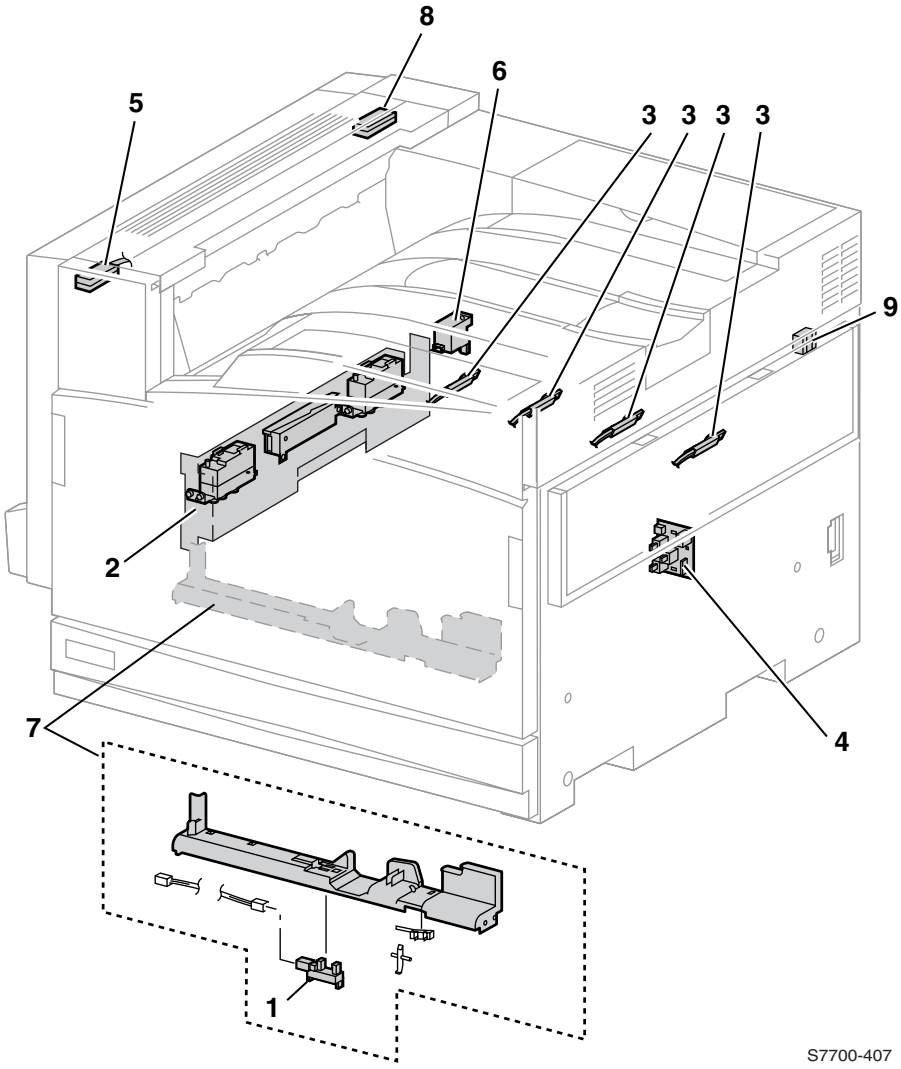


**Figure 8-8 Switch and Sensor FRUs**

### Table 8-8 Switch and Sensor FRUs List

| Parts | Part Number | Qty | Name and Description (vendor description) |
|---|---|---|---|
| 1 | 116-1299-00 | 1 | Waste Cartridge Full Sensor (part of Sensor Kit) |
| 2 | 116-1124-00 | 1 | Mark-On-Belt (MOB) Sensor Assembly |
| 3 | 116-1299-00 | 1 | Automatic Toner Cal (ATC) Sensor Assembly (part of Sensor Kit) |
| 4 | 116-1126-00<br>110K12990<br>(Phaser 7760 compatible) | 1 | Paper-Select Switch Assembly (Switch Assembly PS) - Tray 2/3 Paper Size Switch (also 4/5 on LTA) |
| 5 | 116-1299-00 | 1 | Transport (Exit) Sensor Assembly (part of Sensor Kit) |
| 6 | 116-1299-00 | 1 | Belt Edge "A" Sensor Assembly (part of Sensor Kit) |
| 7 | 116-1138-00 | 1<br>1<br>1<br>1 | Waste Cartridge Sensor Holder (Holder Assembly Sensor)<br>Lever<br>Waste Cartridge Interlock Switch<br>Holder |
| 8 | 116-1545-00 | 1 | Sensor, Left Door Open |
| 9 | 116-1545-00 | 1 | Sensor, Right Door Open |

# PL 8-9 Switch and Sensor FRUs (cont'd.)

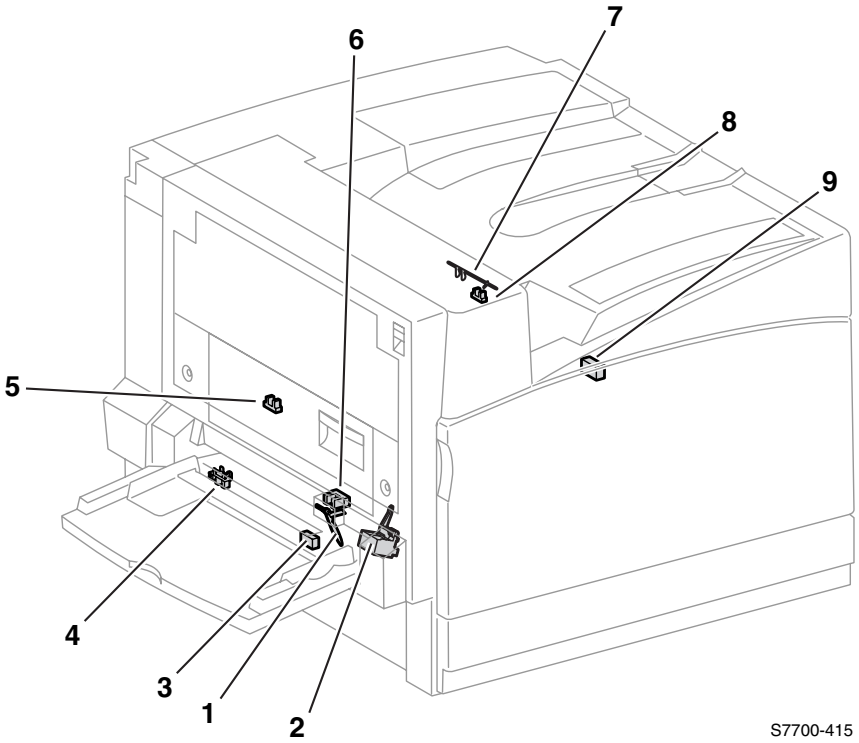


**Figure 8-9 Switch and Sensor FRUs (cont'd.)**

**Table 8-9 Switch and Sensor FRUs List (cont'd.)**

| Parts | Part Number | Qty | Name and Description (vendor description) |
|---|---|---|---|
| 1 | 116-1210-00 | 1 | Paper Detect Flag, MPT (part of Sensor Flag Kit) |
| 2 | 116-1132-00 | 1 | Laser Shutter Solenoid Assembly |
| 3 | 116-1299-00 | 1 | Paper Feed Sensor (part of Sensor Kit) - mounted on LH Lower Cover |
| 4 | 116-1299-00 | 1 | LH Lower Cover Sensor (part of Sensor Kit) |
| 5 | 116-1299-00 | 1 | Transfer Roller Position Sensor (part of Sensor Kit) - mounted on Left-Hand Cover behind Transfer Roller Assembly |
| 6 | 116-1299-00 | 1 | Paper Detect Sensor, MPT (part of Sensor Kit) |
| 7 | 116-1210-00 | 1 | Exit Tray Full Sensor Flag (part of Sensor Flag Kit) - mounted on the Exit Assembly |
| 8 | 116-1299-00 | 1 | Transport (Exit) Sensor (part of Sensor Kit)- mounted on the Exit Assembly |
| 9 | 116-1545-00 | 1 | Sensor, Front Door Open |

# PL 8-10 Circuit Boards FRUs

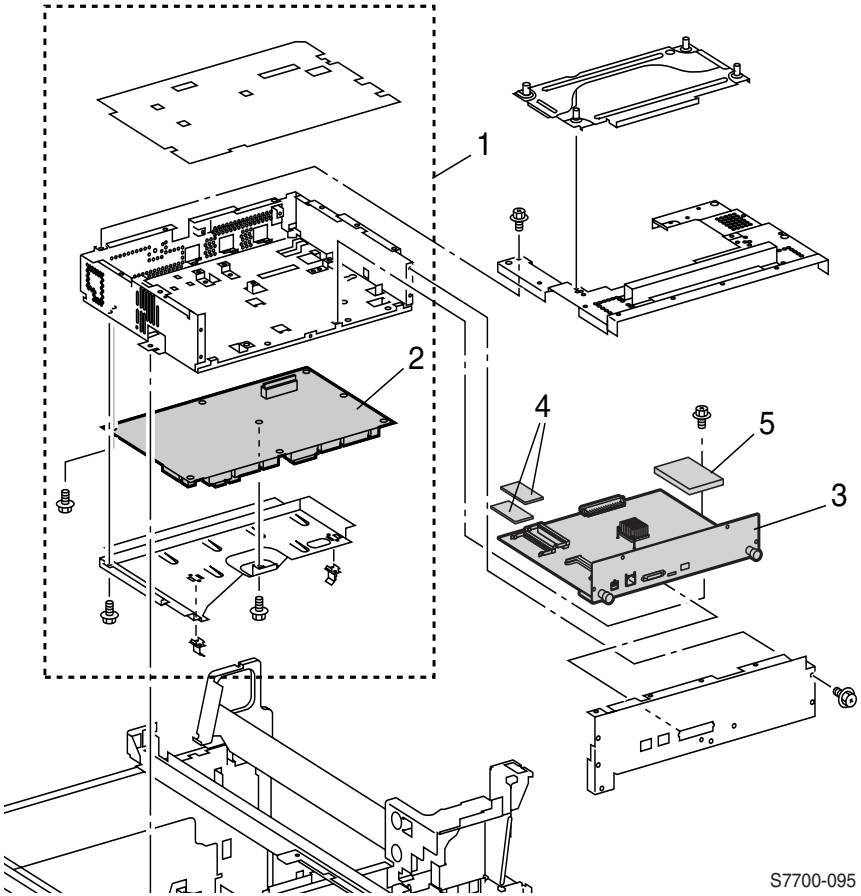


**Figure 8-10 Circuit Boards FRUs**

### Table 8-10 Circuit Board FRUs List

| Parts | Part Number | Qty | Name and Description (vendor description) |
|---|---|---|---|
| 1 | 116-1145-00 | 1 | Chassis Assembly, Elec (Chassis, E, B) |
| 2 | 116-1144-00 | 1 | Engine Control Board (PWBA MCU) |
| 3 | 671-5268-02 | 1 | Image Processor Board |
| 4 | <br>156-4832-00<br>156-4663-00 | 1 | RAM SODIMM<br>128 MB<br>256 MB |
| 5 | 650-4199-01 | 1 | Internal Hard Drive, Programmed 7700 |

# PL 8-11 Power Supplies FRUs

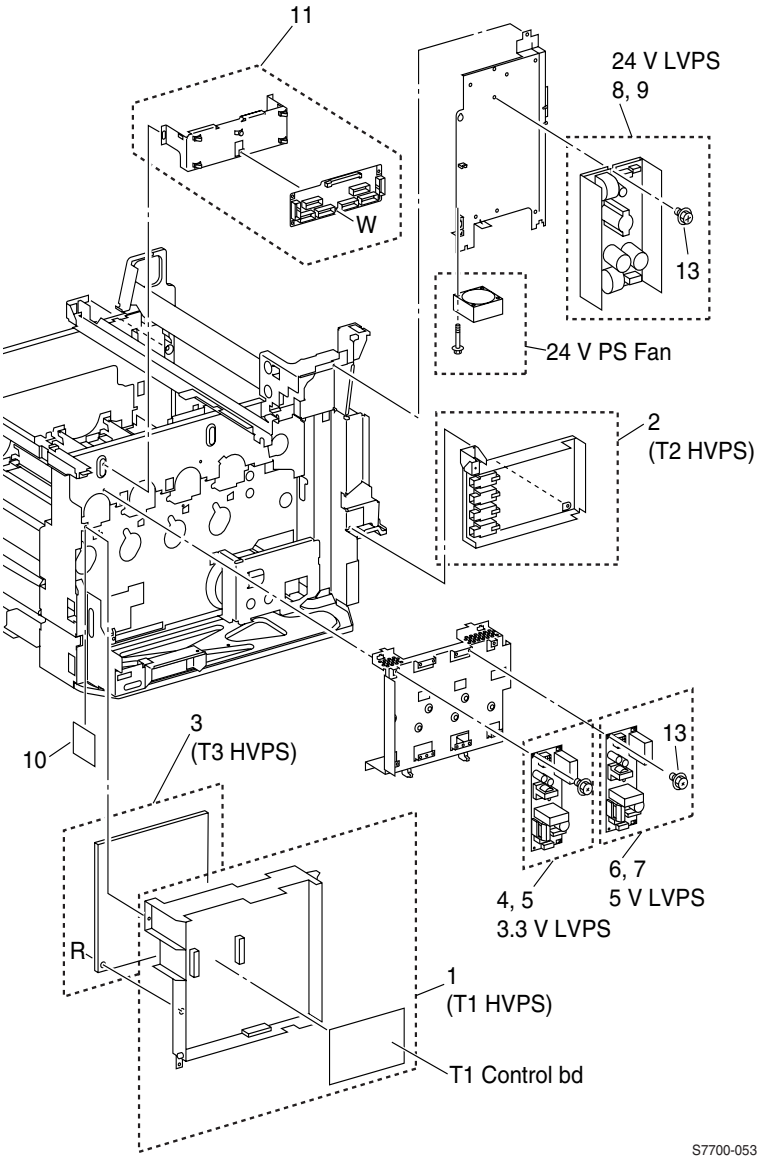


**Figure 8-11 Power Supplies FRUs**

### Table 8-11 Power Supplies FRUs List

| Parts | Part Number | Qty | Name and Description (vendor description) |
|---|---|---|---|
| 1 | 116-1146-00 | 1<br>1 | High-Voltage Power Supply -T1(PSHVT1)<br>T1 Control Board |
| 2 | 116-1147-00 | 1 | High-Voltage Power Supply -T2 (PSHVT2) |
| 3 | 116-1148-00 | 1 | High-Voltage Power Supply - T3 (PSHVT3) |
| 4 | 116-1149-00 | 1 | Low-Voltage Power Supply (3V), 110V (PSLV LF308) |
| 5 | 116-1150-00 | 1 | Low-Voltage Power Supply (3V), 220V (PSLV LF308 |
| 6 | 116-1151-00 | 1 | Low-Voltage Power Supply (5 VDC), 110V (PSLV LF506Q) |
| 7 | 116-1152-00 | 1 | Low-Voltage Power Supply (5 VDC), 220V (PSLV LF506Q) |
| 8 | 116-1153-00 | 1 | Low-Voltage Power Supply (24 VDC), 110V (PSLV OP2C) |
| 9 | 116-1154-00 | 1 | Low-Voltage Power Supply (24 VDC), 220V (PSLV OPR2C) |
| 10 | 116-1320-00 | 1 | LD-Power Relay |
| 11 | 116-1143-00 | 1 | Engine Control Interface Board Assembly (PWB IF MCU) |

# PL 8-12 Power Supplies FRUs (cont'd.)

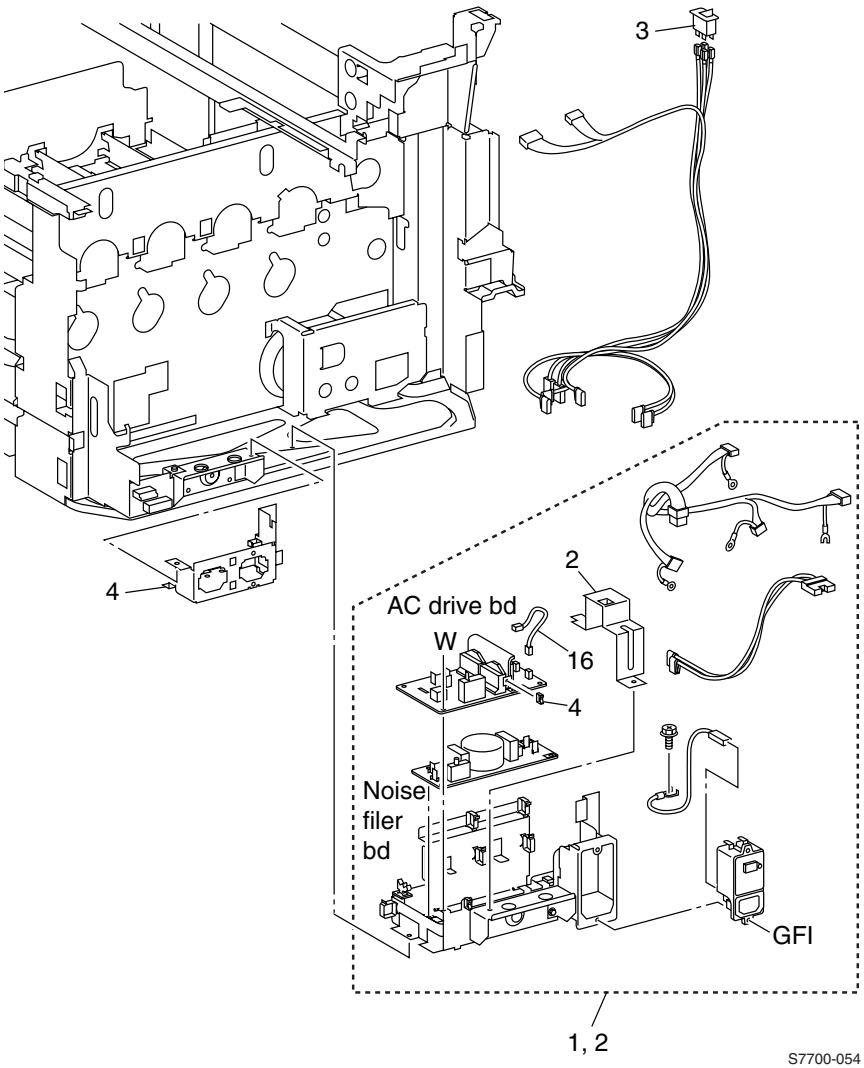


**Figure 8-12 Power Supplies FRUs (cont'd.)**

**Table 8-12 Power Supplies FRUs List (cont'd.)**

| Parts | Part Number | Qty | Name and Description (vendor description) |
|---|---|---|---|
| 1 | 116-1155-00 | 1 | Chassis Assembly - AC Power, 110V |
| | | 1 | Bracket |
| | | 1 | AC Drive Board |
| | | 1 | Clamp |
| | | 1 | Noise filter |
| | | 1 | GFI Breaker |
| | | 1 | Wire harness |
| | | 1 | Wire harness |
| | | 1 | Wire harness |
| | | 1 | Wire harness |
| | | 1 | Screw |
| | | 1 | Wire Harness |
| 2 | 116-1156-00 | 1 | Chassis assembly - AC Power, 220V |
| | | 1 | Bracket |
| | | 1 | AC Drive Board |
| | | 1 | Clamp |
| | | 1 | Noise Filter |
| | | 1 | GFI Breaker |
| | | 1 | Wire Harness |
| | | 1 | Wire Harness |
| | | 1 | Wire Harness |
| | | 1 | Wire Harness |
| | | 1 | Screw |
| | | 1 | Wire harness |
| 3 | 116-1231-00 | 1 | Main Power Switch |
| 4 | 116-1186-00 | 1 | Outlet Assembly |

# PL 8-13 Motors/Drivers FRUs

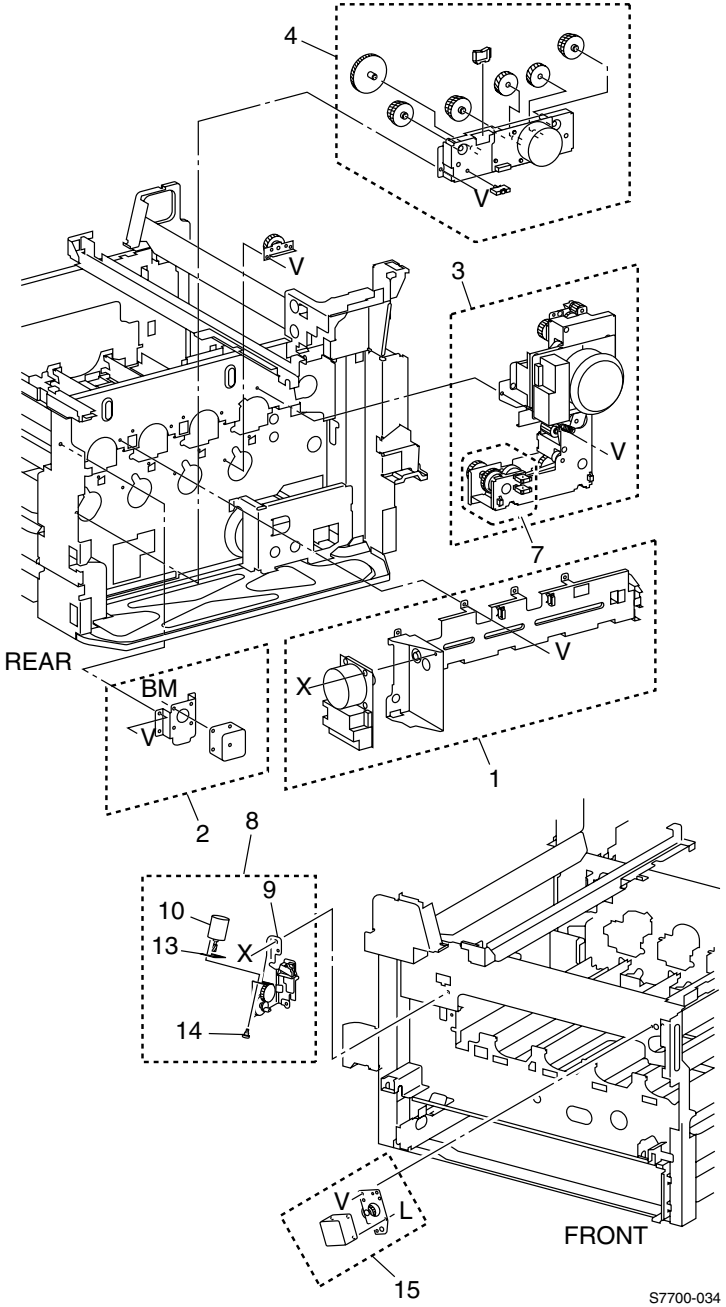


**Figure 8-13 Motors/Drivers FRUs**

**Table 8-13 Motors / Drivers FRUs List**

| Parts | Part Number | Qty | Name and Description (vendor description) |
|---|---|---|---|
| 1 | 116-1102-00 | 1<br>1<br>1 | Print Cartridge Drive Assembly (Drive Assembly Drum)<br>Motor<br>Gear Bracket Assembly |
| 2 | 116-1103-00 | 1<br>1<br>1 | Accumulator Belt Drive Assembly (Drive Assembly IBT)<br>Accumulator Motor Assembly<br>Gear Bracket Assembly |
| 3 | 116-1105-00 | 1 | Main Drive Assembly (Drive Assembly main) |
| 4 | 116-1106-00<br><br><br>116-1107-00 | 1<br>1<br>1 | Developer Drive Assembly (Drive Assembly Dev)<br>Motor<br>Developer Gear Assembly<br>Developer Gear Assembly (without motor) |
| 5 | 116-1104-00 | 1<br>1<br>1 | Steering drive assembly (Drive Assembly Steer)<br>Steering Drive Motor<br>Plate Assembly |
| 6 | 116-1101-00 | 1 | Agitator Motor Assembly (Motor Assembly - Agt) |
| 7 | 116-1539-00 | 1 | Clutch, Black Developer |

# PL 8-14 Electrophotographic Components FRUs

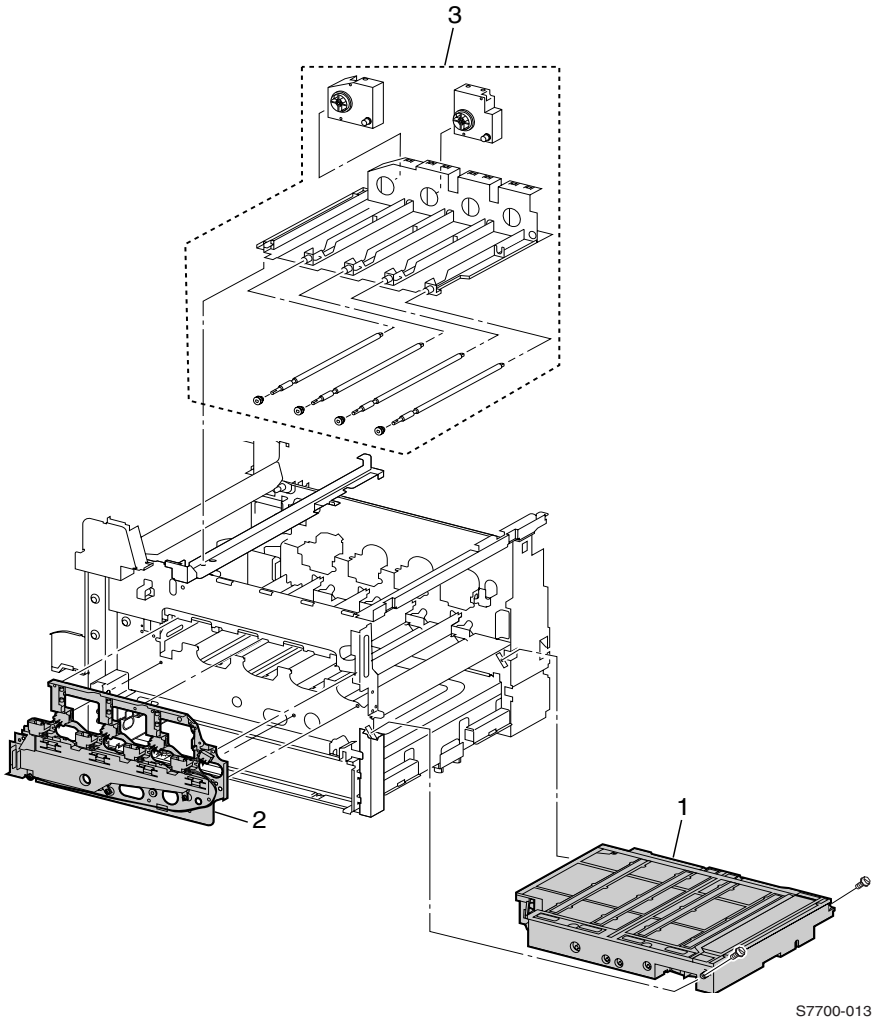


**Figure 8-14 Electrophotographic Components FRUs**

**Table 8-14 Electrophotographic Components FRUs List**

| Parts | Part Number | Qty | Name and Description (vendor description) |
|---|---|---|---|
| 1 | 116-1110-00 | 1 | Laser Unit (ROS Assembly) |
| 2 | 116-1197-00 | 1 | Print cartridge Plate Assembly |
| 3 | 116-1118-00 | 1<br>1<br>4<br>1<br>1<br>1<br>1<br>4 | Toner Dispense Base Assembly (Dispenser Base Assembly)<br>Dispenser Base<br>Gear<br>Toner Dispense Motor (Y)<br>Toner Dispense Motor (M)<br>Toner Dispense Motor (C)<br>Toner Dispense Motor (K)<br>Shaft |

# PL 8-15 Electrophotographic Components FRUs (cont'd.)

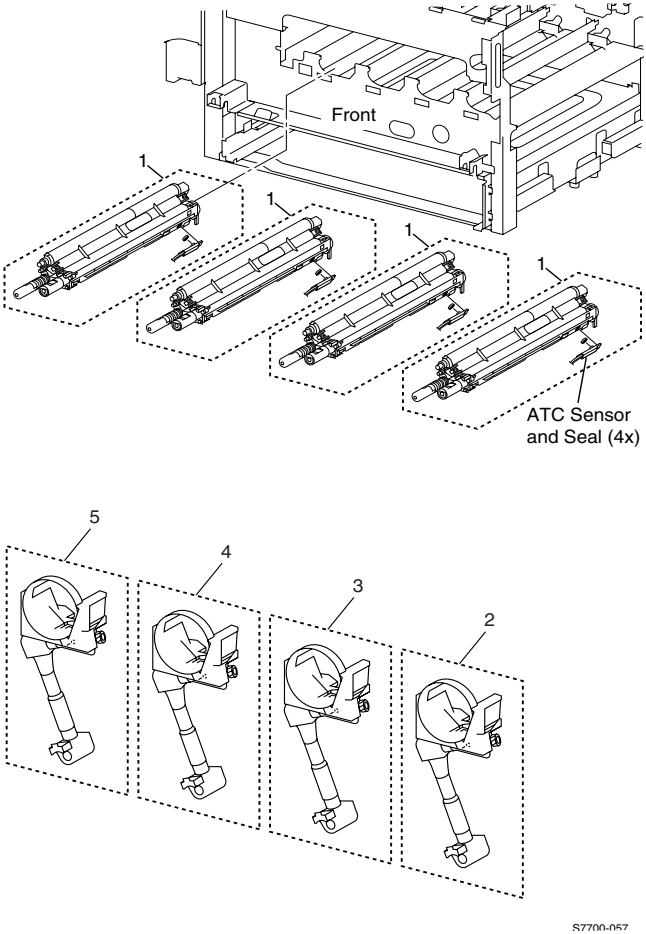


**Figure 8-15 Electrophotographic Components FRUs (cont'd.)**

**Table 8-15 Electrophotographic Components FRUs List (cont'd.)**

| Parts | Part Number | Qty | Name and Description (vendor description) |
|---|---|---|---|
| 1 | 116-1115-00 | 1 | Developer Housing Assembly (Hsg Assembly Deve) |
| | | 1 | Developer Housing |
| | | 1 | ATC Sensor |
| | | 1 | Seal |
| | | | *Note: requires one of the following:* |
| | 116-1111-00 | | Developer, Black (Pkg Assembly DV K) |
| | 116-1112-00 | | Developer, Yellow (Pkg Assembly DV Y) |
| | 116-1113-00 | | Developer, Magenta (Pkg Assembly DV M) |
| | 116-1114-00 | | Developer, Cyan (Pkg Assembly DV C) |
| 2 | 116-1121-00 | 1 | Yellow dispense assembly (Disp Assembly - Y) |
| 3 | 116-1122-00 | 1 | Magenta Dispense Assembly (Disp Assembly - M) |
| 4 | 116-1119-00 | 1 | Cyan Dispense Assembly (Disp Assembly - C) |
| 5 | 116-1120-00 | 1 | Black Dispense Assembly (Disp Assembly - K) |

# PL 8-16 Multi-Purpose Tray FRUs

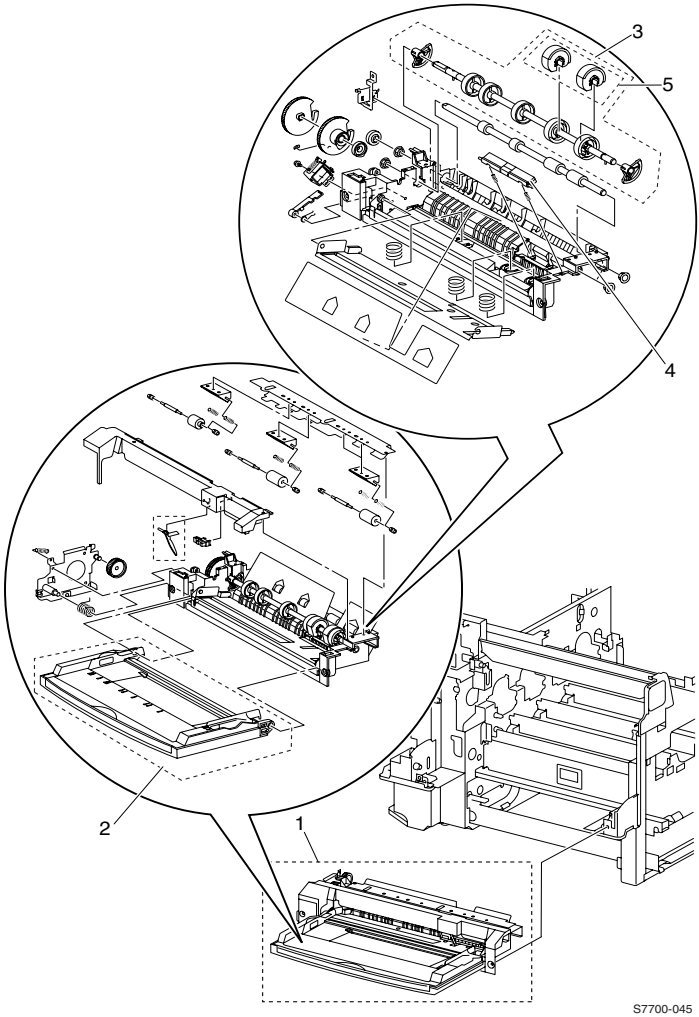


**Figure 8-16 Multi-Purpose Tray FRUs**

**Table 8-16 Multi-Purpose Tray (MPT) FRUs List**

| Parts | Part Number | Qty | Name and Description (vendor description) |
|---|---|---|---|
| 1 | 116-1157-00 | 1 | Multi-Purpose Tray (MPT) Assembly |
| 2 | 116-1158-00 | 1 | MPT Tray<br>Pinch Roller Assembly 1 (w 10,11, 13, 14,16)<br>Pinch Roller Assembly 2 (w 13-17)<br>Pinch Roller Assembly 3 (w 11, 13-16) |
| 3 | 116-1159-00 | 1 | Paper Pick Roller, MPT<br>Feed Roller Assembly<br>Feed Roller<br>Cam<br>Cam<br>Shaft Assembly |
| 4 | 116-1166-00 | 1 | Pad Assembly, Retard |
| 5 | 116-1212-00 | 2 | MPT Pick Rollers |

# PL 8-17 Paper Feed FRUs

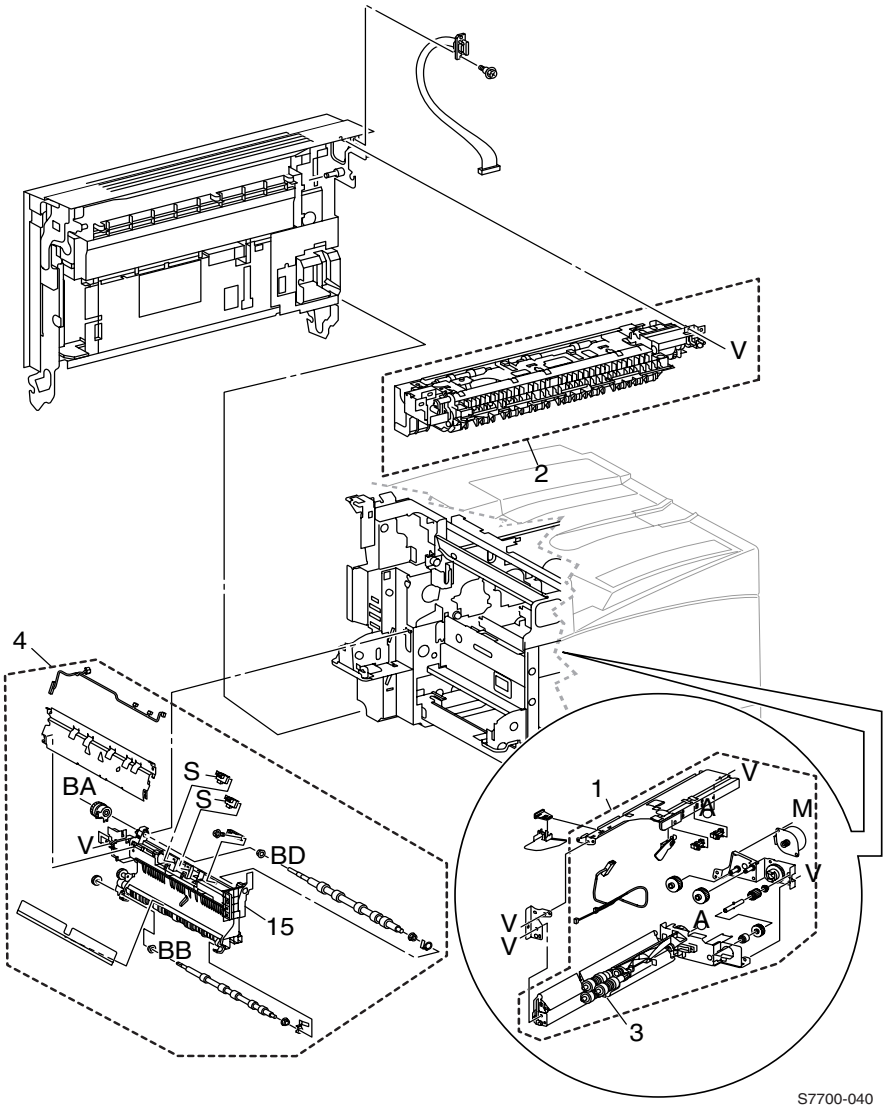


**Figure 8-17 Paper Feed FRUs**

## Table 8-17 Paper Feed FRUs List

| Parts | Part Number | Qty | Name and Description (vendor description) |
|---|---|---|---|
| 1 | 116-1160-00 | 1 | Paper Feeder Assembly (Feeder Assembly) |
| | | 1 | Paper Feed Motor Assembly |
| | | 3 | Roller Feed/Nudge/Retard |
| | 116-1109-00 | | Paper Feed Motor only (Motor Assembly) |
| 2 | 116-1161-00 | 1 | Transport Assembly, Inverter (Transport Inv) |
| 3 | 116-1163-00 | 1 | Roller Assembly, Feed/Nudge/Retard (Roll Assembly) |
| 4 | 116-1164-00 | 1 | Transport Assembly, Registration (Transport AV OPB) |
| | | 1 | Bearing |
| | | 1 | Bearing |
| | | 1 | Drive Roll |
| | | 1 | Gear (22T) |
| | | 1 | Paper Guide |
| | | 1 | REGI Chute |
| | | 1 | REGI Clutch |
| | | 1 | Bearing |
| | | 2 | Earth Plate |
| | | 1 | REGI Roll |
| | | 1 | REGI sensor |
| | | 1 | Screw |
| | | 1 | OHP Sensor R/L |
| | | 1 | REGI support |
| | | 1 | Wire Harness |
| 5 | 011E10711 (compatible with Phaser 7760) | 1 | Interlock Actuator (not shown) |

# PL 8-18 Paper Feed FRUs (cont'd.)

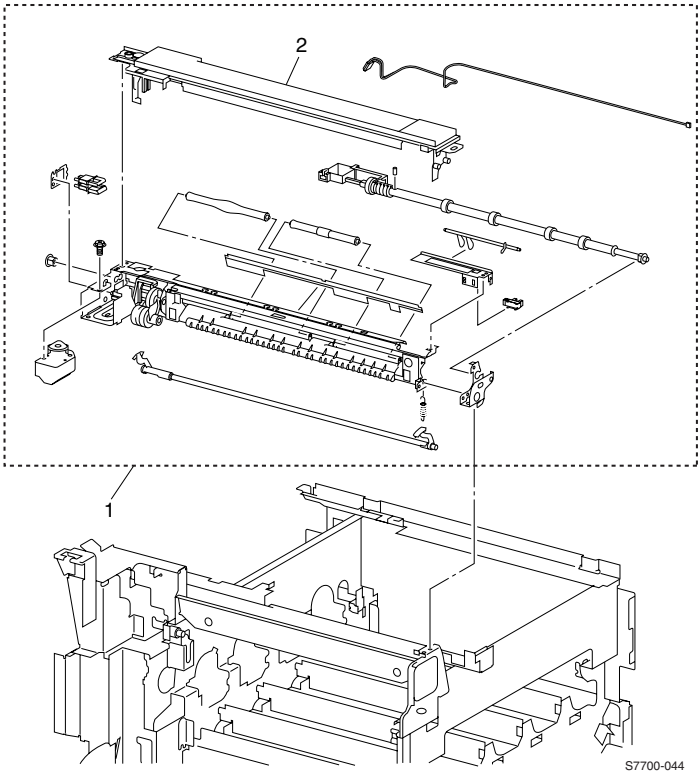


**Figure 8-18 Paper feed FRUs (cont'd.)**

**Table 8-18 Paper Feed FRUs List (cont'd.)**

| Parts | Part Number | Qty | Name and Description (vendor description) |
|---|---|---|---|
| 1 | 116-1165-00 | 1<br>1<br>1<br>1<br>1<br>1<br>1<br>1<br>1<br>1<br>1<br>1<br>1<br>1<br>1<br>1<br>1<br>1<br>1<br>1 | Transport Assembly, Exit -OCT (Transport Assembly)<br>Exit Cover<br>Bearing<br>Pin<br>Exit roller (OCT)<br>Actuator<br>Bracket Assembly<br>Full Paper Stack Sensor<br>Latch Assembly<br>Spring<br>Pinch Roller<br>Pinch Roller<br>LH Cover Interlock Switch<br>Bracket<br>Eliminator<br>Offset Motor<br>Wire Harness<br>Screw<br>Front Bracket<br>Frame Assembly |
| 2 | 116-1196-00 | 1 | Exit cover |

# PL 8-19 Fans FRUs

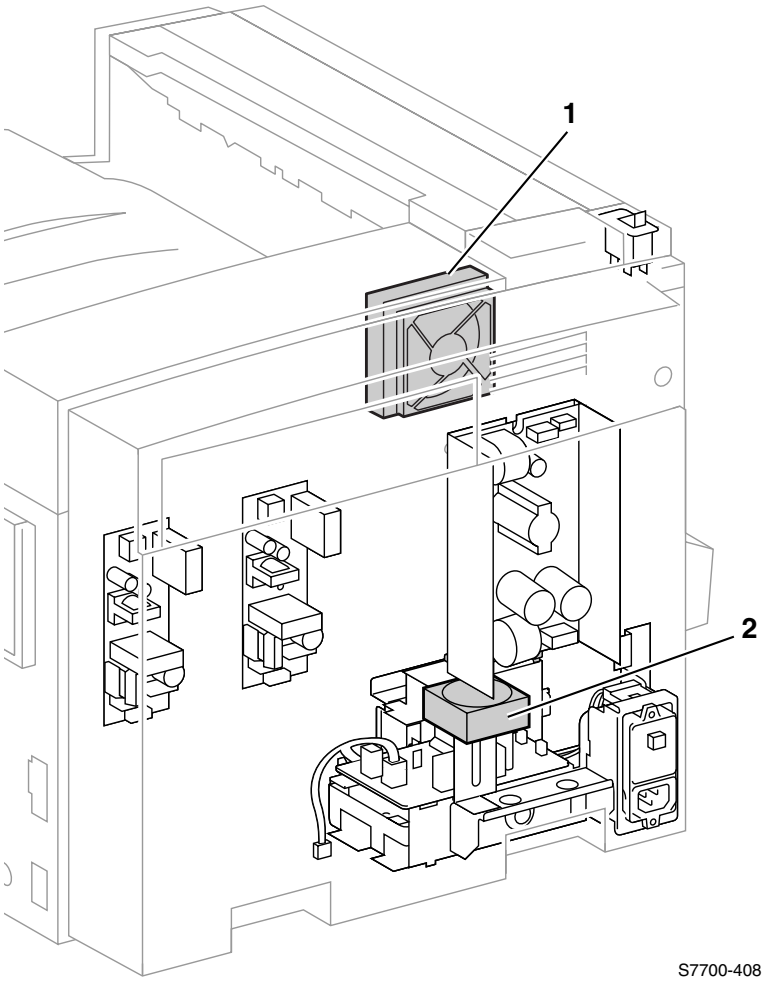


**Figure 8-19 Fans FRUs**

**Table 8-19 Fans FRUs List**

| Parts | Part Number | Qty | Name and Description (vendor description) |
|---|---|---|---|
| 1 | 116-1176-00 | 1 | Fuser Fan Assembly (Fan Fuser) |
| 2 | 116-1175-00 | 1 | 24 VDC LVPS Fan Assembly (Fan Assembly PSLV) |

# PL 8-20 Lift Components FRUs

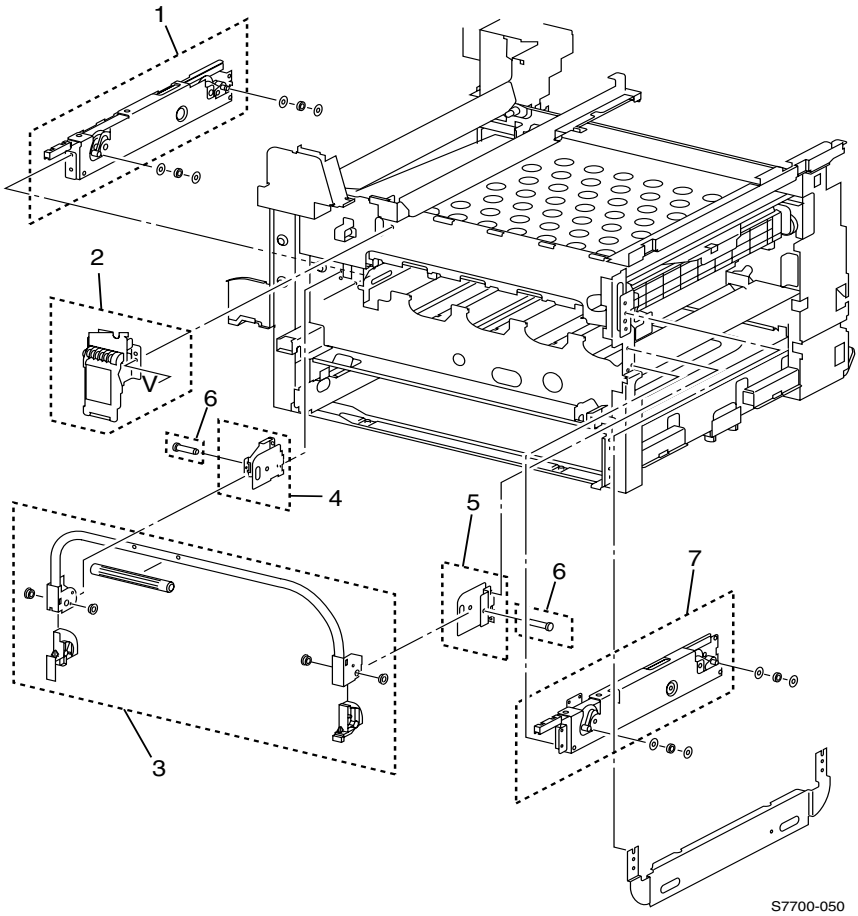


**Figure 8-20 Lift Components FRUs**

### Table 8-20 Lift Components FRUs List

| Parts | Part Number | Qty | Name and Description (vendor description) |
|---|---|---|---|
| 1 | 116-1198-00 | 1 | Frame Lift Jack Assembly LH |
| 2 | 116-1202-00 | 1 | Main Latch Assembly |
| 3 | 116-1204-00 | 1 | Main Lever Assembly |
| 4 | 116-1200-00 | 1 | Hinge, Lever LH |
| 5 | 116-1201-00 | 1 | Hinge, Lever RH |
| 6 | 116-1203-00 | 2 | Pin, Main |
| 7 | 116-1199-00 | 1 | Frame Lift Jack Assembly RH |

# PL 8-21 Wiring FRUs

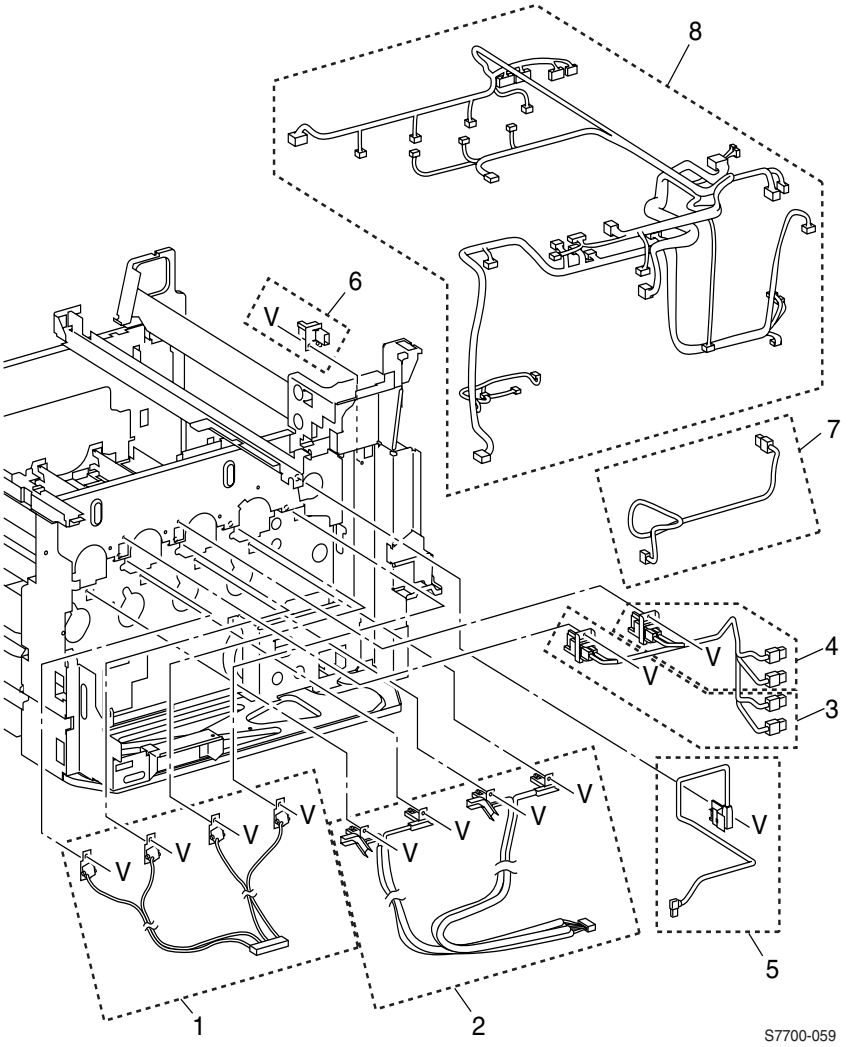


**Figure 8-21 Wiring FRUs**

**Table 8-21 Wiring FRUs List**

| Parts | Part Number | Qty | Name and Description (vendor description) |
|---|---|---|---|
| 1 | 116-1223-00 | 1 | Wire Harness - Dev Bias (Block Assembly In) |
| 2 | 116-1312-00 | 1 | Wire Harness - Charge Roller (Harness Assembly-BCR) |
| 3 | 116-1307-00 | 1 | Wire Harness - 1BTR - Y, M |
| 4 | 116-1308-00 | 1 | Wire Harness - 1BTR - C, K |
| 5 | 116-1309-00 | 1 | Wire Harness - 2BTR |
| 6 | 116-1306-00 | 1 | DTS Connector |
| 7 | 116-1310-00 | 1 | Wire Harness - DTS |
| 8 | 116-1311-00 | 1 | Wire Harness - Main (HA - DC Main P MN) |

# PL 8-22 Auxiliary Feeder FRUs

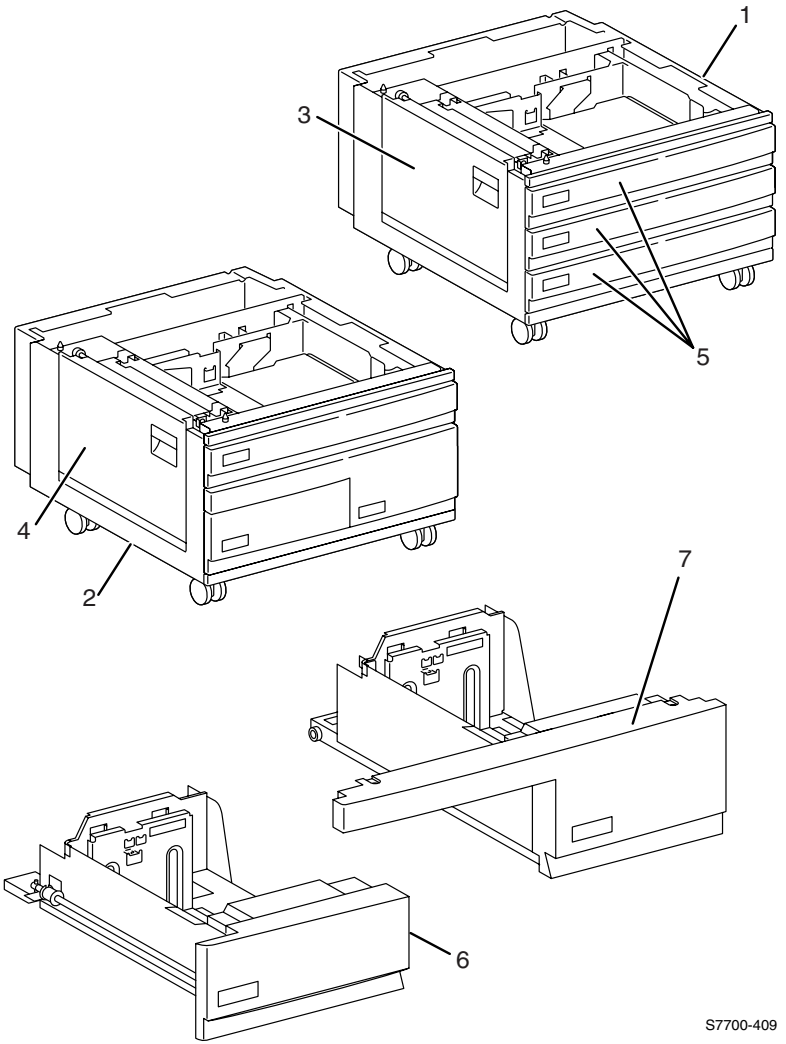


**Figure 8-22 Auxiliary Feeder FRUs**

## Table 8-22 Auxiliary Feeders FRUs List

| Parts | Part Number | Qty | Name and Description (vendor description) |
|---|---|---|---|
| 1 | 116-1080-00 | 1 | Lower Tray Deck (LTD) |
| 2 | 116-1079-00 | 1 | High-Capacity Feeder (HCF) |
| 3 | 116-1184-00 | 1 | Lower Tray Deck (LTD) cover LH (Cover Assembly LH 3) |
| 4 | 116-1185-00 | 1 | High-Capacity feeder (HCF) cover LH (Cover Assembly - H, T) |
| 5 | 116-1091-00 | 1 | Universal Paper Tray |
| 6 | 116-1090-00 | 1 | High-capacity Feeder Tray 3 |
| 7 | 116-1089-00 | 1 | High-capacity Feeder Tray 4 |

# PL 8-23 Lower Tray Deck (LTD) FRUs

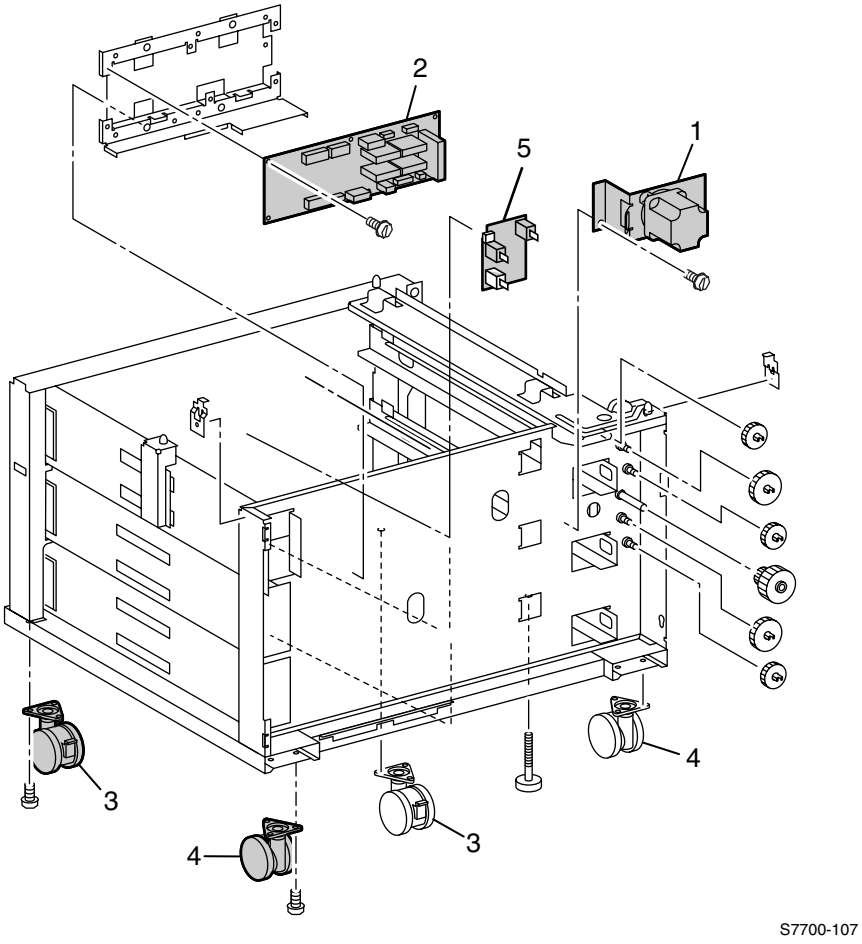


**Figure 8-23 Lower Tray Deck (LTD) FRUs**

### Table 8-23 Lower Tray Deck (LTD) FRUs List

| Parts | Part Number | Qty | Name and Description (vendor description) |
|---|---|---|---|
| 1 | 116-1100-00 | 1 | Aux. Feeder Motor Assembly (Motor Assembly 3TM) |
| 2 | 116-1219-00 | 1 | LTD Control Board (PWB Assembly - 3TM) |
| 3 | 116-1206-00 | 2 | Caster, Locking |
| 4 | 116-1221-00 | 2 | Caster |
| 5 | 116-1126-00<br>110K12990<br>(Phaser 7760 compatible) | 1 | Switch Assy, Paper Select - Tray 2/3 Paper Size Switch (also 4/5 on LTA) |

# PL 8-24 Lower Tray Deck (LTD) FRUs (cont'd.)

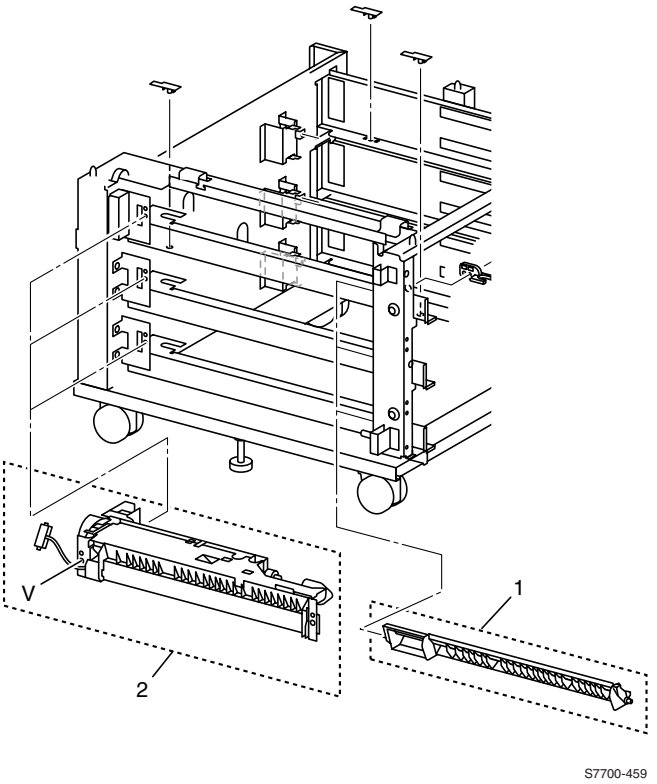


**Figure 8-24 Lower Tray Deck (LTD) FRUs (cont'd.)**

**Table 8-24 Lower Tray Deck (LTD) FRUs List (cont'd.)**

| Parts | Part Number | Qty | Name and Description (vendor description) |
|---|---|---|---|
| 1 | 116-1167-00 | 1 | Chute, Lower |
| 2 | 116-1160-00 | 1 | Feed Assembly, Paper |

# PL 8-25 High-Capacity Feeder FRUs

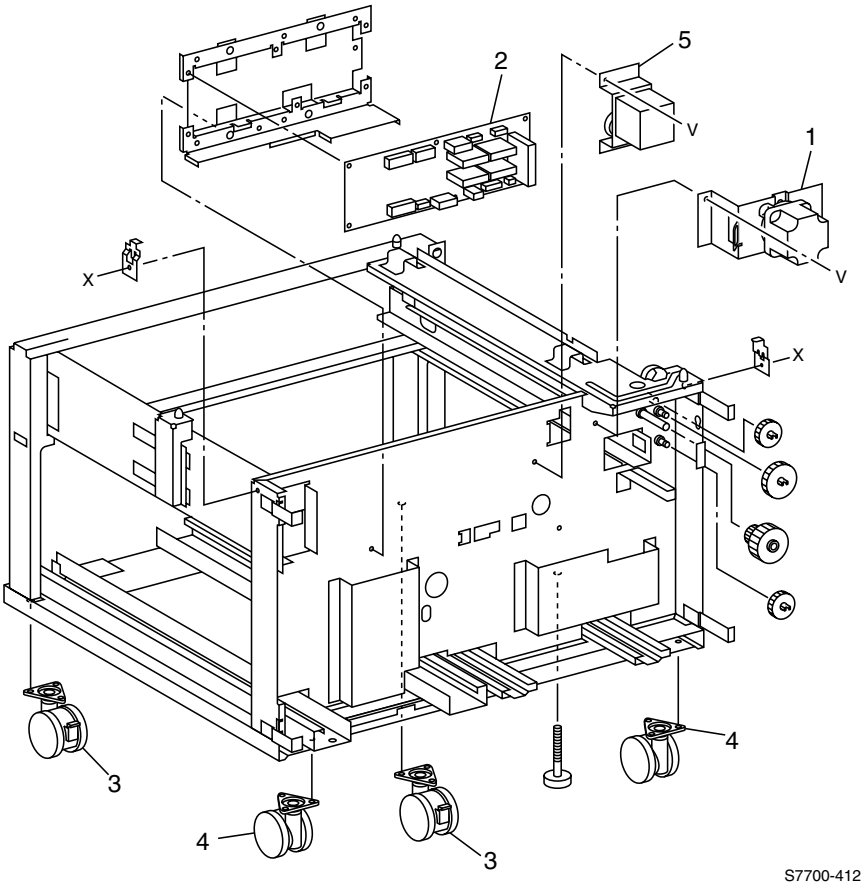


**Figure 8-25 High-Capacity Feeder FRUs**

**Table 8-25 High-Capacity Feeder FRUs List**

| Parts | Part Number | Qty | Name and Description (vendor description) |
|---|---|---|---|
| 1 | 116-1100-00 | 1 | Aux. Feeder Motor Assembly (Motor Assembly 3TM) |
| 2 | 116-1220-00 | 1 | HCF Control Board (PWB Assembly - TTM) |
| 3 | 116-1206-00 | 2 | Caster, Locking |
| 4 | 116-1221-00 | 2 | Caster |
| 5 | 116-1099-00 | 1 | Transport Motor Assembly (Motor Assembly TTM) |

# PL 8-26 High-Capacity Feeder FRUs (cont'd.)

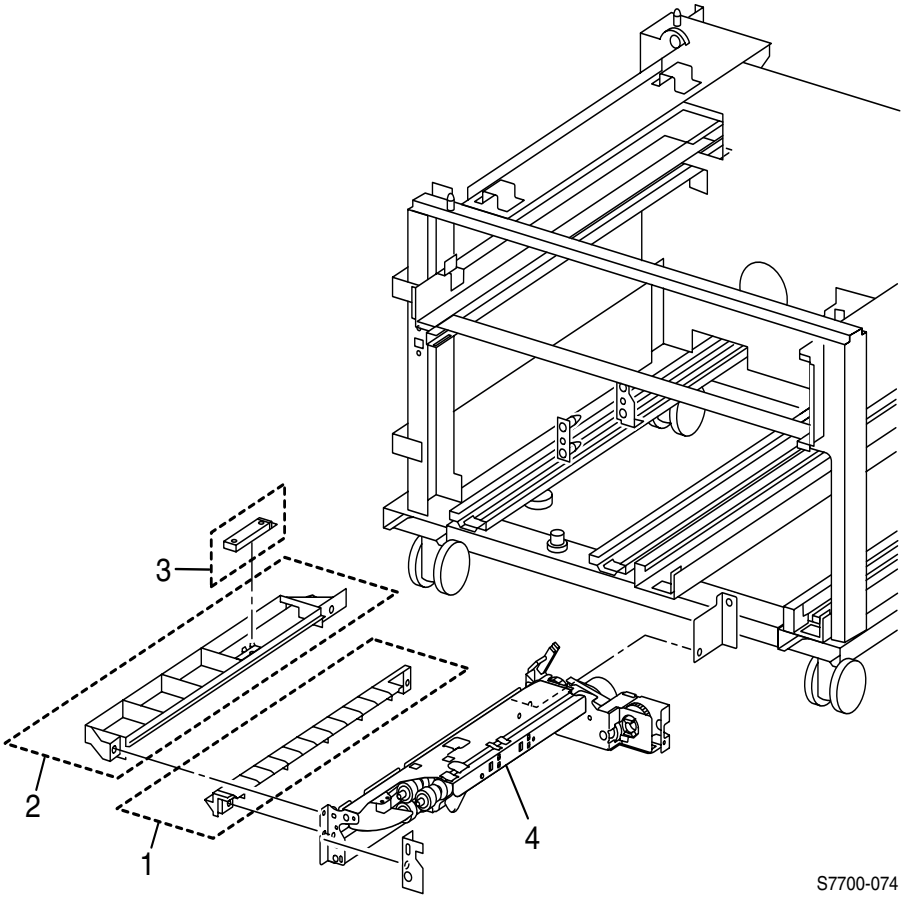


**Figure 8-26 High-Capacity Feeder FRUs (cont'd.)**

**Table 8-26 High-Capacity Feeder FRUs List (cont'd.)**

| Parts | Part Number | Qty | Name and Description (vendor description) |
|---|---|---|---|
| 1 | 116-1168-00 | 1 | Chute to Lower (Chute F/O - Lower) |
| 2 | 116-1169-00 | 1 | Chute to Upper (Chute F/O - Upper) |
| 3 | 116-1218-00 | 1 | HFC tray 4 Feed out Sensor (Reflect Sensor GP2A25)) |
| 4 | 116-1172-00 | 1 | Paper Feeder Assembly, HCF Tray 4 (Feeder Assembly TTM) |

# PL 8-27 High-Capacity Feeder FRUs (cont'd.)

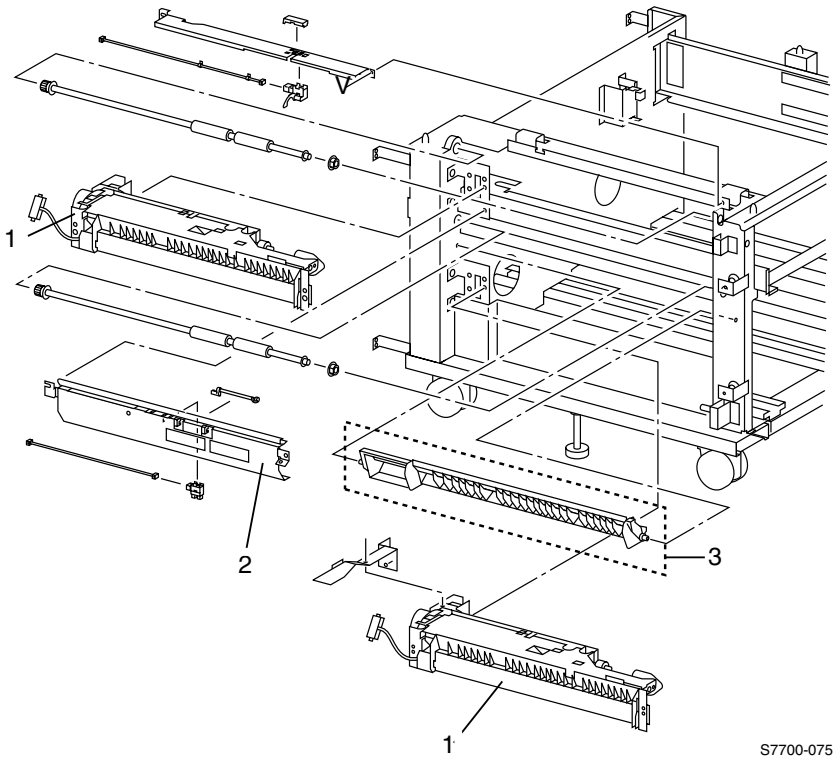


**Figure 8-27 High-Capacity Feeder FRUs (cont'd.)**

**Table 8-27 High-Capacity Feeder FRUs List (cont'd.)**

| Parts | Part Number | Qty | Name and Description (vendor description) |
|---|---|---|---|
| 1 | 116-1160-00 | 2 | Paper Feeder Assembly (Feeder Assembly) |
| 2 | 116-1173-00 | 1 | Chute Assembly FO-HCF (Chute Assembly Inlet) |
| 3 | 116-1167-00 | 1 | Chute, Lower, HFC (Chute - Lower) |

# PL 8-28 High-Capacity Feeder FRUs (cont'd.)

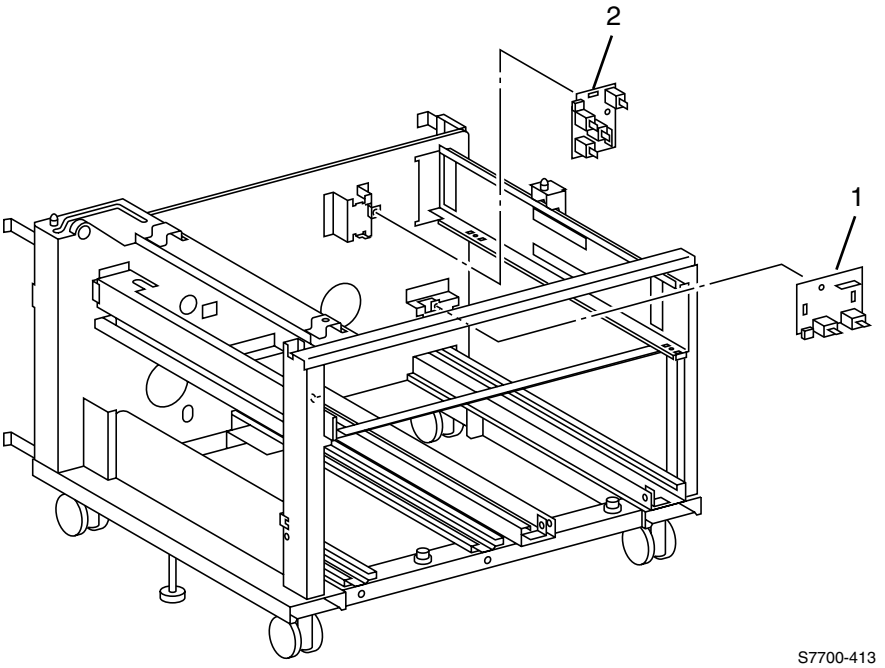


**Figure 8-28 High-Capacity Feeder FRUs (cont'd.)**

**Table 8-28 High-Capacity Feeder FRUs List (cont'd.)**

| Parts | Part Number | Qty | Name and Description (vendor description) |
|---|---|---|---|
| 1 | 116-1127-00<br>110K11081<br>(Phaser 7760 compatible) | 2 | HCF Paper-Select Paper-Select Switch Assembly (Switch Assembly PS) |
| 2 | 116-1126-00 | 1 | Switch Assy, Paper-Select |

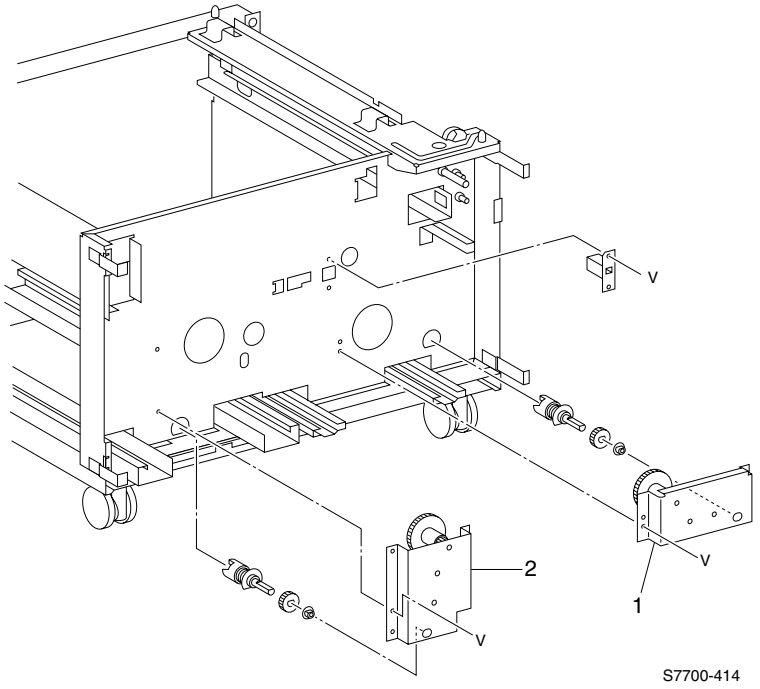


**Figure 8-29 High-Capacity Feeder FRUs (cont'd.)**

**Table 8-29 High-Capacity Feeder FRUs (cont'd.)**

| Parts | Part Number | Qty | Name and Description (vendor description) |
|---|---|---|---|
| 1 | 116-1171-00 | 1 | Bracket Assembly, Gear LH (HFC) |
| 2 | 116-1170-00 | 1 | Bracket Assembly, Gear RH (HFC) |

# Kits

**Table 8-30 Kits**

| Parts | Part Number | Qty | Name and Description (vendor description) |
|---|---|---|---|
| | 116-1210-00 | 1<br>1<br>1<br>1 | Sensor Flag Kit (Sensor Actuator)<br>Actuator (120E11971)<br>Actuator Sensor (120E18141)<br>Actuator Sensor (120E18160) |
| | 116-1211-00 | 1<br>3 | Tray Roller Kit (Roll Assembly Kit)<br>Pick, Nudge, Retard Rollers (22K56820) |
| | 116-1212-00 | 1 | MPT Pick Roller Kit (Roll Assembly Kit) |
| | 116-1299-00 | 1 | Sensor Kit (Sensor Kit DBP)<br>Photo Sensor (130E82190)<br>Sensor-trn, full (130E91010)<br>Sensor Assembly-Edge, A (130K60830)<br>Sensor Assembly (130K60851)<br>Sensor Assembly, ATC (130K61281)<br>Sensor Assembly-T/A (130K61510) |
| | 116-1300-00 | 1<br>2<br>3<br>4<br>6<br>3<br>3<br>4<br>4 | Hardware<br>Screw: (26E17890)<br>Screw: (113W20657)<br>Screw: (153W17855)<br>Screw: (158W27655)<br>Screw: (158W27663)<br>Screw: (158W27855)<br>Screw: (158W27863)<br>e-clip: (354W21251) |
| | 065-0592-00 | 1 | Repackaging Kit |
| | 065-0601-00 | 1 | Internal Repackaging Kit |

# Manual Packs & Service Manual

### Table 8-31 Manual Packs & Service Manual

| Part Number | Qty | Name and Description |
|---|---|---|
| 061-4413-00 | 1 | Manual Pack; English |
| 061-4414-00 | 1 | Manual Pack; French |
| 061-4415-00 | 1 | Manual Pack; Spanish |
| 061-4416-00 | 1 | Manual Pack; Brazilian/Portuguese |
| 061-4430-00 | 1 | Manual Pack; Italian |
| 061-4431-00 | 1 | Manual Pack; German |
| 061-4432-00 | 1 | Manual Pack; Simplified Chinese |
| 061-4433-00 | 1 | Manual Pack; Traditional Chinese |
| 061-4434-00 | 1 | Manual Pack; Russian |
| 061-4435-00 | 1 | Manual Pack; Dutch |
| 061-4436-00 | 1 | Manual Pack; Swedish |
| 061-4437-00 | 1 | Manual Pack; Danish |
| 061-4438-00 | 1 | Manual Pack; Norwegian |
| 061-4439-00 | 1 | Manual Pack; Finnish |
| 061-4440-00 | 1 | Manual Pack; Czech |
| 061-4441-00 | 1 | Manual Pack; Hungarian |
| 061-4442-00 | 1 | Manual Pack; Polish |
| 061-4444-00 | 1 | Manual Pack; Korean |
| 061-4445-00 | 1 | Manual Pack; International English |
| 061-4448-00 | 1 | Manual Pack; Japanese |
| 071-0860-00 | 1 | Phaser 7700 Service Quick Reference Guide |

## Software

**Table 8-32 Software**

| Part Number | Qty | Name and Description |
|---|---|---|
| 063-3405-00 | 1 | CD, Drivers & Utilities; English |
| 063-3406-00 | 1 | CD, Drivers & Utilities; Traditional English |
| 063-3407-00 | 1 | CD, Printer Management |
| 063-3404-00 | 1 | PhaserMatch Software |

## Supplies and Accessories

When the control panel notifies you that a supply is low or needs to be replaced, make certain you have replacements on hand. To order supplies and accessories, contact your local dealer or visit the Xerox website: **www.xerox.com/officeprinting/supplies/**.

**Table 8-33 Supplies**

| Part Number | Supply Item | Qty | Name / Description |
|---|---|---|---|
| 016-1886-00 | Customer-Replaceable Consumable (CRC) | 1 | Print cartridge |
| 016-1883-00 | Customer-Replaceable Consumable (CRC) | 4 | Print cartridge Kit |
| 016-1890-00 | Customer-Replaceable Unit | 1 | Transfer roller |
| 116-1094-00 | Maintenance Item | 1 | Belt cleaner assembly |
| 116-1889-00 | Maintenance Item | 1 | Accumulator Belt |
| 016-1882-00 | Standard Toner Cartridge (CRC) | 1 | Black |
| 016-1879-00 | Standard Toner Cartridge (CRC) | 1 | Cyan |
| 016-1880-00 | Standard Toner Cartridge (CRC) | 1 | Magenta |
| 016-1881-00 | Standard Toner Cartridge (CRC) | 1 | Yellow |
| 016-1947-00 | Hi-capacity Toner Cartridge (CRC) | 1 | Black |
| 016-1944-00 | Hi-capacity Toner Cartridge (CRC) | 1 | Cyan |
| 016-1945-00 | Hi-capacity Toner Cartridge (CRC) | 1 | Magenta |
| 016-1946-00 | Hi-capacity Toner Cartridge (CRC) | 1 | Yellow |
| 016-1891-00 | Customer-Replaceable Consumable | 1 | Waste toner cartridge |
| 016-1222-00 | Customer-Replaceable Consumable | 1 | Staple pack |
| 016-1887-00 | Customer-Replaceable Consumable | 1 | Fuser 110V |
| 016-1888-00 | Customer-Replaceable Consumable | 1 | Fuser 220V |

**Table 8-34 Accessories**

| Part Number | Accessories | Qty | Name / Description |
|---|---|---|---|
| ZMC128/A | 128 Mbytes RAM | N/A | Additional Memory |
| ZMC256/A | 256 Mbytes RAM | N/A | Additional Memory |
| 116-1091-00 | Trays 1 ~ 4 | N/A | Universal Tray |
| 7700TD/A | Lower Tray Deck | N/A | Includes three Universal trays. |
| 7700HCF/A | High-Capacity Feeder | N/A | Includes one Universal tray and two High-Capacity Letter/A4 trays. |
| 7700FNS/A | Finisher | N/A | Includes one Finisher Output Tray and staplers. |
| ZCARTC/A | Printer Cart | N/A | Available for printers without a Lower Tray Deck or High-Capacity Feeder. |

## Recommended Service Tools

The following service are recommended as a start for servicing the printer. As additional tools are needed visit the following URL for help: **http://cpid.opbu.xerox.com/hardwaretools.html**.

**Table 8-35 Recommended Tools List**

| Part Number | Description |
|---|---|
| 003-0293-00 | Driver, Magnetic 0.25” drive (no bits), 8” Shank |
| 003-0335-00 | Tip, #1 Philips Bit, 0.25” Drive |
| 003-0336-00 | Tip, #2 Philips Bit, 0.25” Drive |
| 640600 Mag 27020 | Tip, 2.5 mm Hex Bit, 0.25” Drive |
| 600T2123 | Hex Nutdriver, 5.5 mm (magnetic) |

# Test Prints

A variety of test prints are available to aid in determining the quality of output from the printer and to assist in troubleshooting print image quality problems. The topic “Troubleshooting” on page 3-87 discusses solutions to the problems shown in this section. This section illustrates the test prints available through both the Postscript Menu and from the Service Diagnostics Menu.

**The PostScript Menu** has two sets of test prints: Print Color Test Pages and Print Solid Fill Pages.

1. From the main menu, scroll to and then select **Support Menu --> Improve print-quality?**.
2. Select **Print Color Test Pages** or **Print Solid Fill Pages**.

**The Service Diagnostics Menu** has 4 test print suites: Laser Check, Halftones, Grid 1-dot and Fast Scan 8 Tone. There is also a menu selection for Paper Path options. This is not a test print, but an option for selecting paper output and media size from within the test print mode.

1. Turn off the printer.
2. Hold down the **Back** button and the **Info** button simultaneously while turning the printer back on.
3. Continue to hold both keys until the front panel display reads **Service Diagnostics V3.60, Initializing,** then release.
4. Select **Built-in Test Prints**.

# Analyzing the Test Print

Test prints provide several uses in troubleshooting printer problems.

- Isolating problems to either the print engine or to the Image Processing Board and host software.
- Locating feed and paper transport problems.
- Detecting print-quality and image registration problems.

## Using Test Prints to Isolate a Problem to the Print Engine or to the Image Processing Board

You can use test prints to determine if a problem is caused by a faulty print engine or by a faulty Image Processing Board or host software.

**Note** This procedure presumes you have investigated any displayed error code or message. If not, please do so now.

1. Print a sample image from the host computer.
2. Enter Printer Diagnostics and generate a test print.
3. Compare both prints.
4. If the problem occurs when you print from the host computer but does not occur when you print from Diagnostics, the problem may be in the Image Processing Board, in the print driver software, or in the application software on the host computer.
5. If the problem occurs when you print a test print, then the problem is in the print engine.

**Note** You can also use the above procedure to assist in determining if a print-quality problem is caused by a faulty print engine, Image Processing board or host software. If the print-quality problem is an image registration problem, refer to “Adjustments and Calibration” on page 4-123 of this manual for instructions on adjusting image registration.

## Using Test Prints to Locate a Feed or Paper Transport Problem

You can use test prints to locate a problem with paper feed or with paper transportation along the paper path.

**Note** This procedure presumes you have investigated any displayed error code or message pertaining to paper feed or transport problems. If not, please do so now.

1. Enter Printer Diagnostics and generate a test print.
2. Follow the paper along the paper path to locate the cause of the problem.

# Print Color Test Prints

This color test print produces 6 prints, CMYK 4 on 4 off, a solid fill red, and 4 on 4 off bars.

**Interpreting Print Color Test Prints**

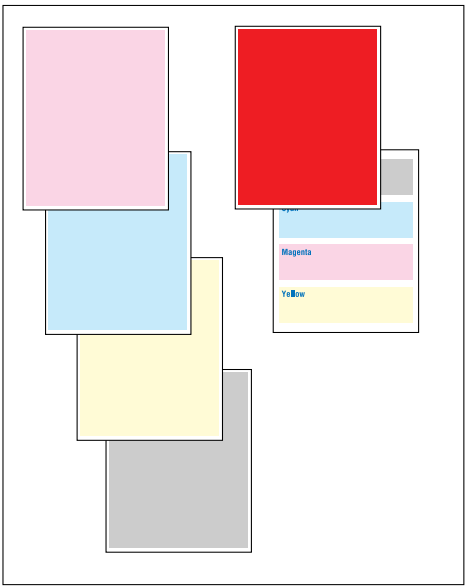


S7700-291

CYMK 4 on 4 off

### Interpreting Solid Fill Test Prints

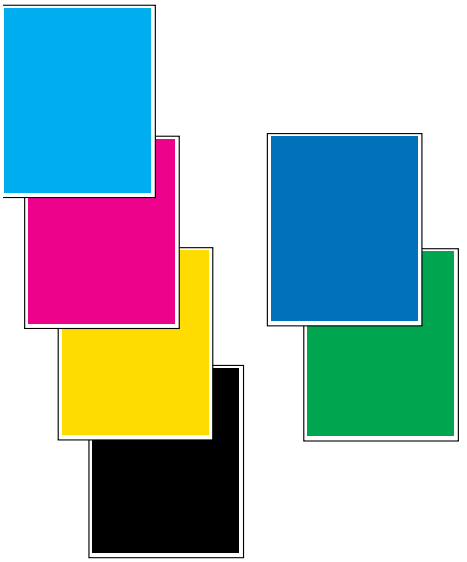

S7700-289

Non-uniformity in any one color may indicate a problem with the developer or print units. Light streaks in one color indicate developer or debris blocking the laser.

Dark streaks in one color indicate a problem with the developer or print units.

Repeating spots in one color indicate a problem with the print unit.

Non-repeating spots in all colors indicate problems with the transfer belt.

Things to look for:

- Uniformity in each color
- Streaks
- Spots
- Repeating spots
- Any one weak color may indicate a faulty developer, print unit, or first transfer.
- Weak colors may also be caused by a defective high-voltage power supply.
- If all colors are weak, this could indicate a problem with the ADC or second transfer systems.
- “Worm tracks” or wrinkles may be caused by the fuser.

S7700-290

### Laser Check

This is a gray print with all four colors turned on at about 25% fill.
Things to look for:
A hue shift that indicates one of the primary CMYK colors is missing. A missing primary indicates that the laser is faulty.

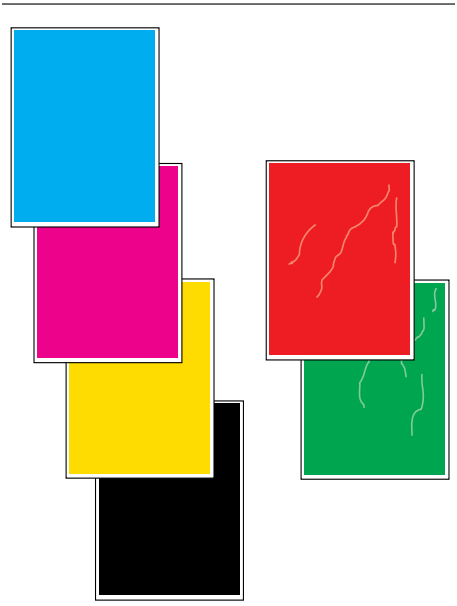

S7700-292

### Halftones

This test prints 6 pages of 100% solid fill of: Yellow, Magenta, Cyan, Black, Red and Green. This print sequence is very useful in determining if there is any streaking of (usually) yellow or cyan that has interfered with RegiCon (registration control).
When you get DC685-1 results showing "A-Patch IN/OUT block counts" of less than 24 (or "B-Patch IN/OUT block counts" of less than 4), use these prints to decide if attention needs to be focussed on the toner delivery mechanisms. Until toner is evenly deposited on the developer roller, RegiCon cannot pass.
Things to look for:
A “mottled” color, especially on the red and green pages.

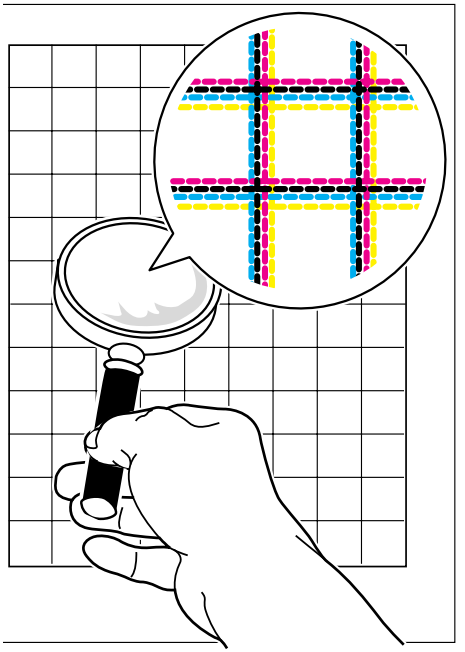
S7700-293

**Grid 1-dot**

This print is especially useful in the manual process of registration when the automatic process consistently fails due to excessive process and lateral margin adjustment. There are some printer/laser positioning situations where the intrinsic error in lateral margin offset is too great for the DC685-1 test to automatically compensate for, and a manual adjustment is required. The Adjustments/Calibrations Menu: Coarse RegiCon Init Test is required to make these adjustments manually before the DC685-1 test can pass. When the YMK vertical lines are within 1-2 mm of the cyan line, DC685-1 should pass.

It is recommended that after doing the Coarse RegiCon Init adjustments of the lateral margin offsets, make another grid 1-dot print. There have been some printers that corrupt the NVRAM and the lines do not end up where you intended them to go. You may have to experiment with a different order of moving two or more lines to get the desired results: all four colors within a 1-2 mm vertical "line."

Things to look for:

- Mis-registration

**Fast Scan 8**

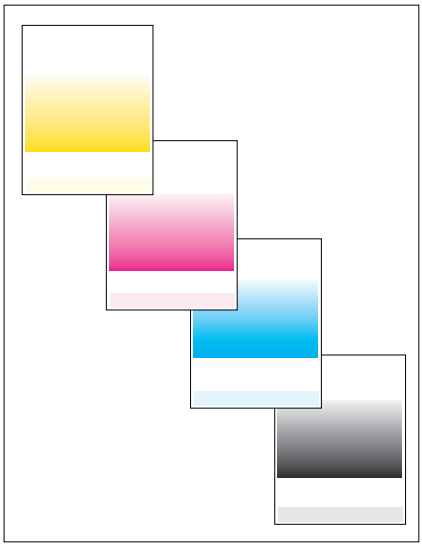

S7700-294

These four prints of the primary colors are test prints that seem to be intended to find any laser "ringing" behavior. The beam is stepped through 8 halftones in the scan line. Some people have noticed that there seem to be only 7 distinct bands. Maybe one of the bands is 0% fill?

Things to look for:
Within a bar, any “ringing” that indicates the laser is not capable of making a solid bar of the same halftone.

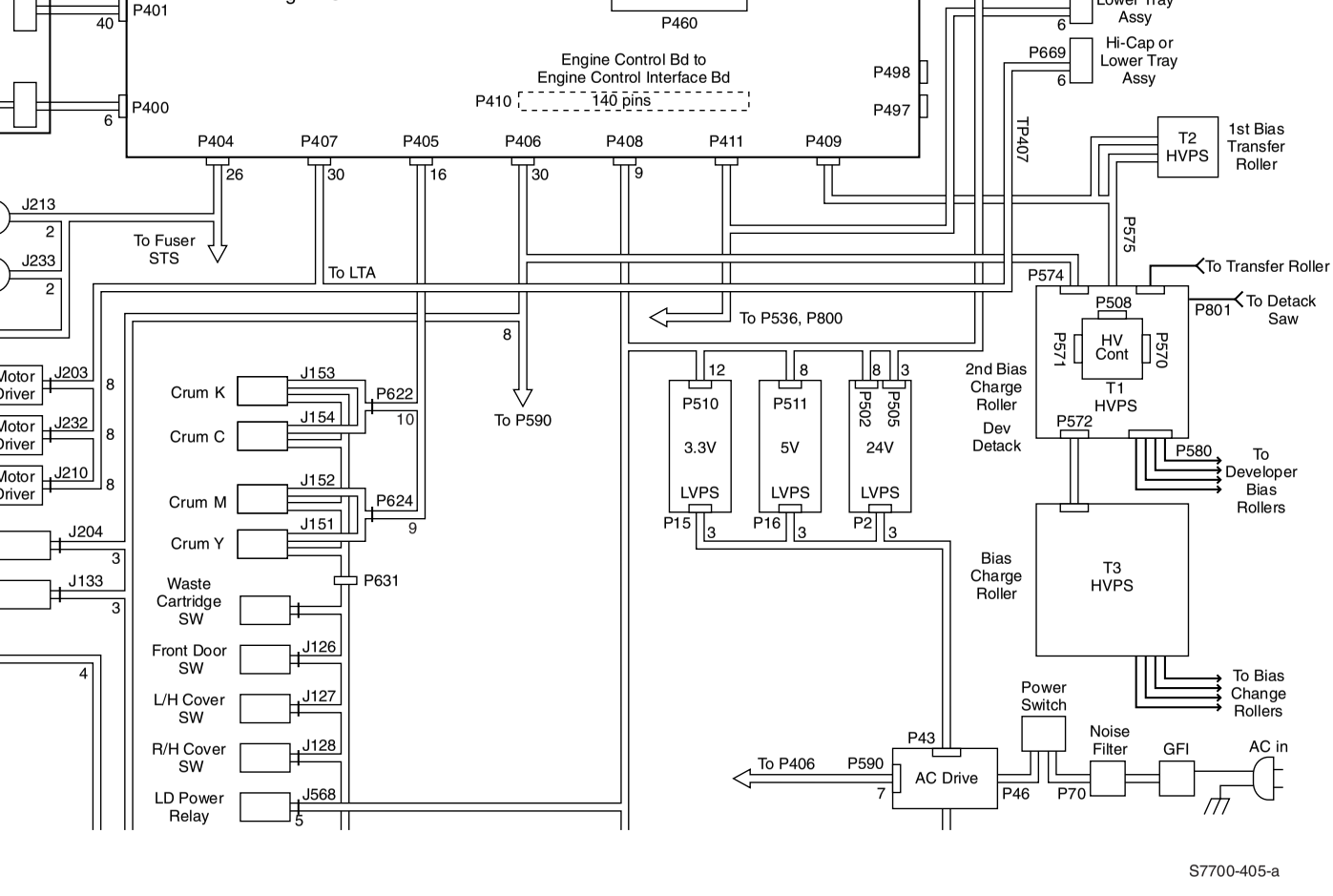
P401
40
P460
Lower Tray Assy
6
P669
Hi-Cap or Lower Tray Assy
6
Engine Control Bd to Engine Control Interface Bd
P410
140 pins
P498
P497
P400
6
P404
P407
P405
P406
P408
P411
P409
26
30
16
30
9
TP407
T2 HVPS
1st Bias Transfer Roller
J213
2
J233
2
To Fuser STS
To LTA
P575
To Transfer Roller
P574
P508
P801
To Detack Saw
To P536, P800
8
P571
HV Cont
P570
T1 HVPS
Motor Driver
J203
8
Crum K
J153
P622
10
To P590
12
8
8
3
2nd Bias Charge Roller
Dev Detack
P572
P580
To Developer Bias Rollers
Motor Driver
J232
8
Crum C
J154
P510
3.3V
LVPS
P511
5V
LVPS
P502
P505
24V
LVPS
Motor Driver
J210
8
Crum M
J152
P624
9
P15
3
P16
3
P2
3
J204
3
Crum Y
J151
Bias Charge Roller
T3 HVPS
J133
3
Waste Cartridge SW
P631
Front Door SW
J126
4
L/H Cover SW
J127
To Bias Change Rollers
Power Switch
R/H Cover SW
J128
P43
Noise Filter
GFI
AC in
To P406
P590
AC Drive
7
P46
P70
LD Power Relay
J568
5
S7700-405-a

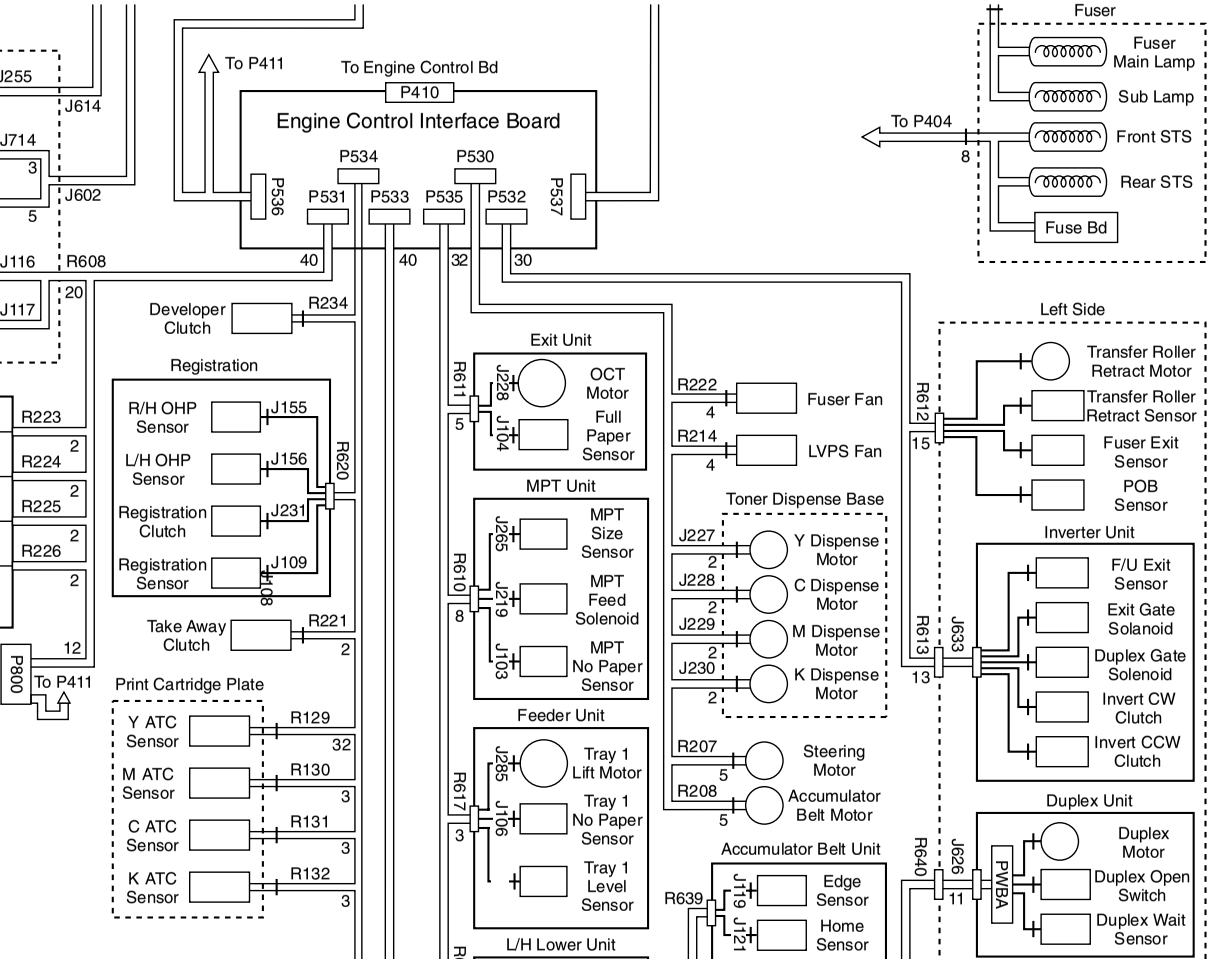
Fuser
Fuser Main Lamp
Sub Lamp
Front STS
Rear STS
Fuse Bd
To P404
8
To P411
To Engine Control Bd
P410
Engine Control Interface Board
P534
P530
P536
P531
P533
P535
P532
P537
40
40
32
30
J255
J614
J714
3
J602
5
J116
R608
J117
20
Developer Clutch
R234
Registration
R/H OHP Sensor
J155
L/H OHP Sensor
J156
Registration Clutch
J231
Registration Sensor
J109
J108
R620
R223
2
R224
2
R225
2
R226
2
12
P800
To P411
Take Away Clutch
R221
2
Print Cartridge Plate
Y ATC Sensor
R129
32
M ATC Sensor
R130
3
C ATC Sensor
R131
3
K ATC Sensor
R132
3
Exit Unit
R611
J228
J104
5
OCT Motor
Full Paper Sensor
MPT Unit
R610
J265
J219
J103
8
MPT Size Sensor
MPT Feed Solenoid
MPT No Paper Sensor
Feeder Unit
R617
J285
J106
3
Tray 1 Lift Motor
Tray 1 No Paper Sensor
Tray 1 Level Sensor
L/H Lower Unit
R222
4
Fuser Fan
R214
4
LVPS Fan
Toner Dispense Base
J227
2
Y Dispense Motor
J228
2
C Dispense Motor
J229
2
M Dispense Motor
J230
2
K Dispense Motor
R207
5
Steering Motor
R208
5
Accumulator Belt Motor
Accumulator Belt Unit
R639
J119
J121
Edge Sensor
Home Sensor
Left Side
R612
15
Transfer Roller Retract Motor
Transfer Roller Retract Sensor
Fuser Exit Sensor
POB Sensor
Inverter Unit
R613
13
J633
F/U Exit Sensor
Exit Gate Solanoid
Duplex Gate Solenoid
Invert CW Clutch
Invert CCW Clutch
Duplex Unit
R640
11
J626
PWBA
Duplex Motor
Duplex Open Switch
Duplex Wait Sensor

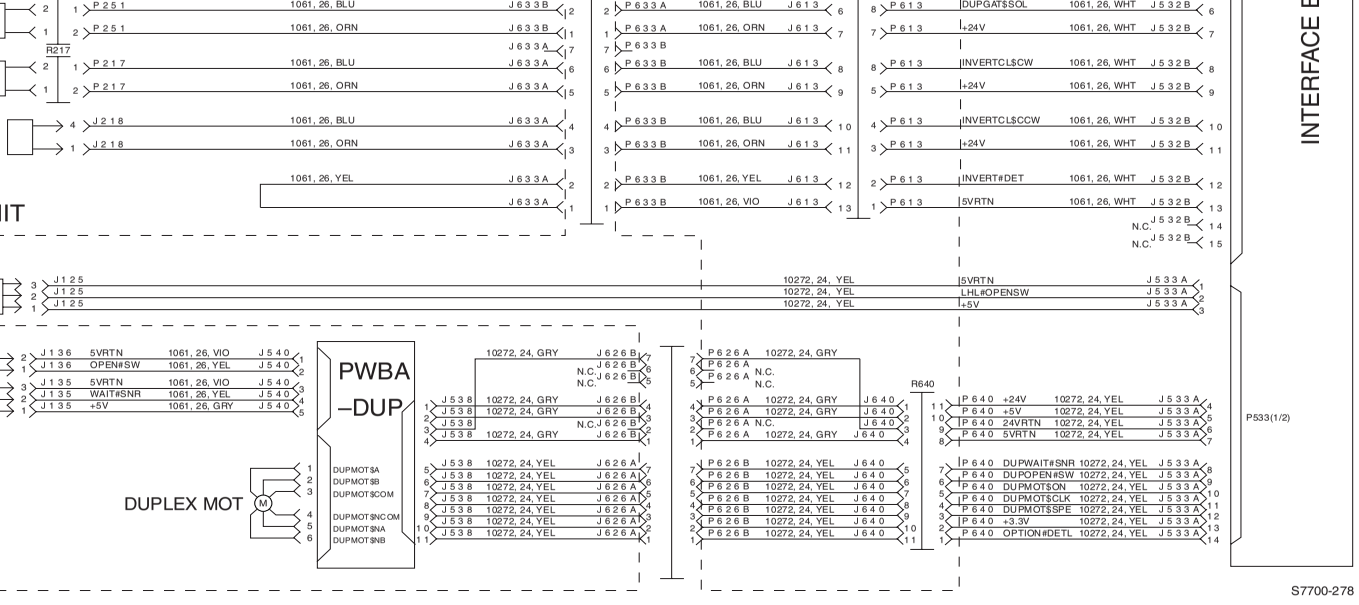
INTERFACE B
P533(1/2)
PWBA
–DUP
DUPLEX MOT
DUPMOT$A
DUPMOT$B
DUPMOT$COM
DUPMOT$NCOM
DUPMOT$NA
DUPMOT$NB
R217
R640
S7700-278

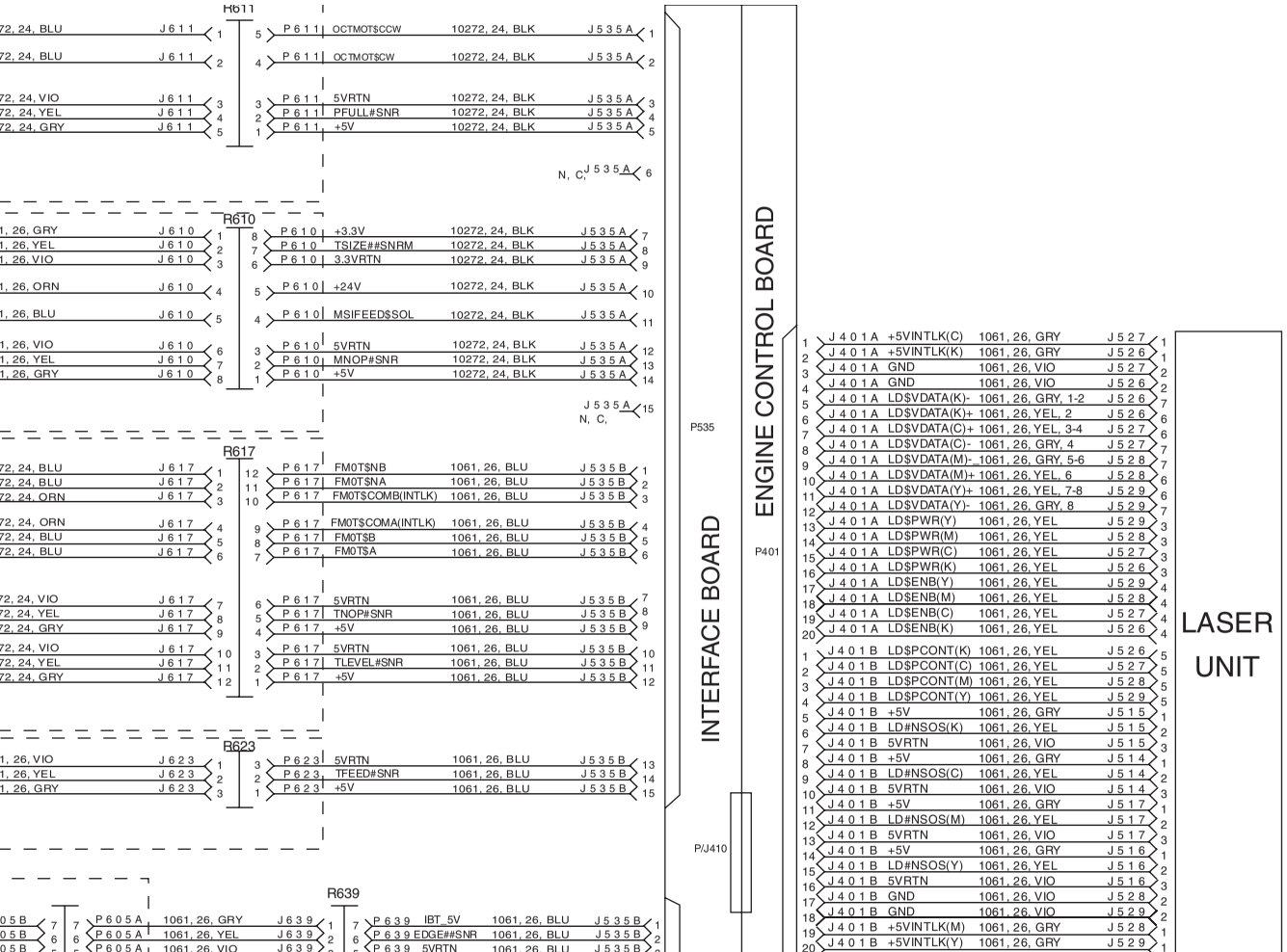

R611
72, 24, BLU J 6 1 1 1
72, 24, BLU J 6 1 1 2
72, 24, VIO J 6 1 1 3
72, 24, YEL J 6 1 1 4
72, 24, GRY J 6 1 1 5
5 P 6 1 1 OCTMOT$CCW 10272, 24, BLK J 5 3 5 A 1
4 P 6 1 1 OCTMOT$CW 10272, 24, BLK J 5 3 5 A 2
3 P 6 1 1 5VRTN 10272, 24, BLK J 5 3 5 A 3
2 P 6 1 1 PFULL#SNR 10272, 24, BLK J 5 3 5 A 4
1 P 6 1 1 +5V 10272, 24, BLK J 5 3 5 A 5
N, C, J 5 3 5 A 6
R610
1, 26, GRY J 6 1 0 1
1, 26, YEL J 6 1 0 2
1, 26, VIO J 6 1 0 3
1, 26, ORN J 6 1 0 4
1, 26, BLU J 6 1 0 5
1, 26, VIO J 6 1 0 6
1, 26, YEL J 6 1 0 7
1, 26, GRY J 6 1 0 8
8 P 6 1 0 +3.3V 10272, 24, BLK J 5 3 5 A 7
7 P 6 1 0 TSIZE##SNRM 10272, 24, BLK J 5 3 5 A 8
6 P 6 1 0 3.3VRTN 10272, 24, BLK J 5 3 5 A 9
5 P 6 1 0 +24V 10272, 24, BLK J 5 3 5 A 10
4 P 6 1 0 MSIFEED$SOL 10272, 24, BLK J 5 3 5 A 11
3 P 6 1 0 5VRTN 10272, 24, BLK J 5 3 5 A 12
2 P 6 1 0 MNOP#SNR 10272, 24, BLK J 5 3 5 A 13
1 P 6 1 0 +5V 10272, 24, BLK J 5 3 5 A 14
J 5 3 5 A 15
N, C,
R617
72, 24, BLU J 6 1 7 1
72, 24, BLU J 6 1 7 2
72, 24, ORN J 6 1 7 3
72, 24, ORN J 6 1 7 4
72, 24, BLU J 6 1 7 5
72, 24, BLU J 6 1 7 6
72, 24, VIO J 6 1 7 7
72, 24, YEL J 6 1 7 8
72, 24, GRY J 6 1 7 9
72, 24, VIO J 6 1 7 10
72, 24, YEL J 6 1 7 11
72, 24, GRY J 6 1 7 12
12 P 6 1 7 FM0T$NB 1061, 26, BLU J 5 3 5 B 1
11 P 6 1 7 FM0T$NA 1061, 26, BLU J 5 3 5 B 2
10 P 6 1 7 FM0T$COMB(INTLK) 1061, 26, BLU J 5 3 5 B 3
9 P 6 1 7 FM0T$COMA(INTLK) 1061, 26, BLU J 5 3 5 B 4
8 P 6 1 7 FM0T$B 1061, 26, BLU J 5 3 5 B 5
7 P 6 1 7 FM0T$A 1061, 26, BLU J 5 3 5 B 6
6 P 6 1 7 5VRTN 1061, 26, BLU J 5 3 5 B 7
5 P 6 1 7 TNOP#SNR 1061, 26, BLU J 5 3 5 B 8
4 P 6 1 7 +5V 1061, 26, BLU J 5 3 5 B 9
3 P 6 1 7 5VRTN 1061, 26, BLU J 5 3 5 B 10
2 P 6 1 7 TLEVEL#SNR 1061, 26, BLU J 5 3 5 B 11
1 P 6 1 7 +5V 1061, 26, BLU J 5 3 5 B 12
R623
1, 26, VIO J 6 2 3 1
1, 26, YEL J 6 2 3 2
1, 26, GRY J 6 2 3 3
3 P 6 2 3 5VRTN 1061, 26, BLU J 5 3 5 B 13
2 P 6 2 3 TFEED#SNR 1061, 26, BLU J 5 3 5 B 14
1 P 6 2 3 +5V 1061, 26, BLU J 5 3 5 B 15
R639
05 B 7
05 B 6
05 B 5
7 P 6 0 5 A 1061, 26, GRY J 6 3 9 1
6 P 6 0 5 A 1061, 26, YEL J 6 3 9 2
5 P 6 0 5 A 1061, 26, VIO J 6 3 9 3
7 P 6 3 9 IBT_5V 1061, 26, BLU J 5 3 5 B 1
6 P 6 3 9 EDGE##SNR 1061, 26, BLU J 5 3 5 B 2
5 P 6 3 9 5VRTN 1061, 26, BLU J 5 3 5 B 3
P535
INTERFACE BOARD
P/J410
ENGINE CONTROL BOARD
P401
J 4 0 1 A +5VINTLK(C) 1061, 26, GRY J 5 2 7 1
J 4 0 1 A +5VINTLK(K) 1061, 26, GRY J 5 2 6 1
J 4 0 1 A GND 1061, 26, VIO J 5 2 7 2
J 4 0 1 A GND 1061, 26, VIO J 5 2 6 2
J 4 0 1 A LD$VDATA(K)- 1061, 26, GRY, 1-2 J 5 2 6 7
J 4 0 1 A LD$VDATA(K)+ 1061, 26, YEL, 2 J 5 2 6 6
J 4 0 1 A LD$VDATA(C)+ 1061, 26, YEL, 3-4 J 5 2 7 6
J 4 0 1 A LD$VDATA(C)- 1061, 26, GRY, 4 J 5 2 7 7
J 4 0 1 A LD$VDATA(M)- 1061, 26, GRY, 5-6 J 5 2 8 7
J 4 0 1 A LD$VDATA(M)+ 1061, 26, YEL, 6 J 5 2 8 6
J 4 0 1 A LD$VDATA(Y)+ 1061, 26, YEL, 7-8 J 5 2 9 6
J 4 0 1 A LD$VDATA(Y)- 1061, 26, GRY, 8 J 5 2 9 7
J 4 0 1 A LD$PWR(Y) 1061, 26, YEL J 5 2 9 3
J 4 0 1 A LD$PWR(M) 1061, 26, YEL J 5 2 8 3
J 4 0 1 A LD$PWR(C) 1061, 26, YEL J 5 2 7 3
J 4 0 1 A LD$PWR(K) 1061, 26, YEL J 5 2 6 3
J 4 0 1 A LD$ENB(Y) 1061, 26, YEL J 5 2 9 4
J 4 0 1 A LD$ENB(M) 1061, 26, YEL J 5 2 8 4
J 4 0 1 A LD$ENB(C) 1061, 26, YEL J 5 2 7 4
J 4 0 1 A LD$ENB(K) 1061, 26, YEL J 5 2 6 4
J 4 0 1 B LD$PCONT(K) 1061, 26, YEL J 5 2 6 5
J 4 0 1 B LD$PCONT(C) 1061, 26, YEL J 5 2 7 5
J 4 0 1 B LD$PCONT(M) 1061, 26, YEL J 5 2 8 5
J 4 0 1 B LD$PCONT(Y) 1061, 26, YEL J 5 2 9 5
J 4 0 1 B +5V 1061, 26, GRY J 5 1 5 1
J 4 0 1 B LD#NSOS(K) 1061, 26, YEL J 5 1 5 2
J 4 0 1 B 5VRTN 1061, 26, VIO J 5 1 5 3
J 4 0 1 B +5V 1061, 26, GRY J 5 1 4 1
J 4 0 1 B LD#NSOS(C) 1061, 26, YEL J 5 1 4 2
J 4 0 1 B 5VRTN 1061, 26, VIO J 5 1 4 3
J 4 0 1 B +5V 1061, 26, GRY J 5 1 7 1
J 4 0 1 B LD#NSOS(M) 1061, 26, YEL J 5 1 7 2
J 4 0 1 B 5VRTN 1061, 26, VIO J 5 1 7 3
J 4 0 1 B +5V 1061, 26, GRY J 5 1 6 1
J 4 0 1 B LD#NSOS(Y) 1061, 26, YEL J 5 1 6 2
J 4 0 1 B 5VRTN 1061, 26, VIO J 5 1 6 3
J 4 0 1 B GND 1061, 26, VIO J 5 2 8 2
J 4 0 1 B GND 1061, 26, VIO J 5 2 9 2
J 4 0 1 B +5VINTLK(M) 1061, 26, GRY J 5 2 8 1
J 4 0 1 B +5VINTLK(Y) 1061, 26, GRY J 5 2 9 1
LASER UNIT

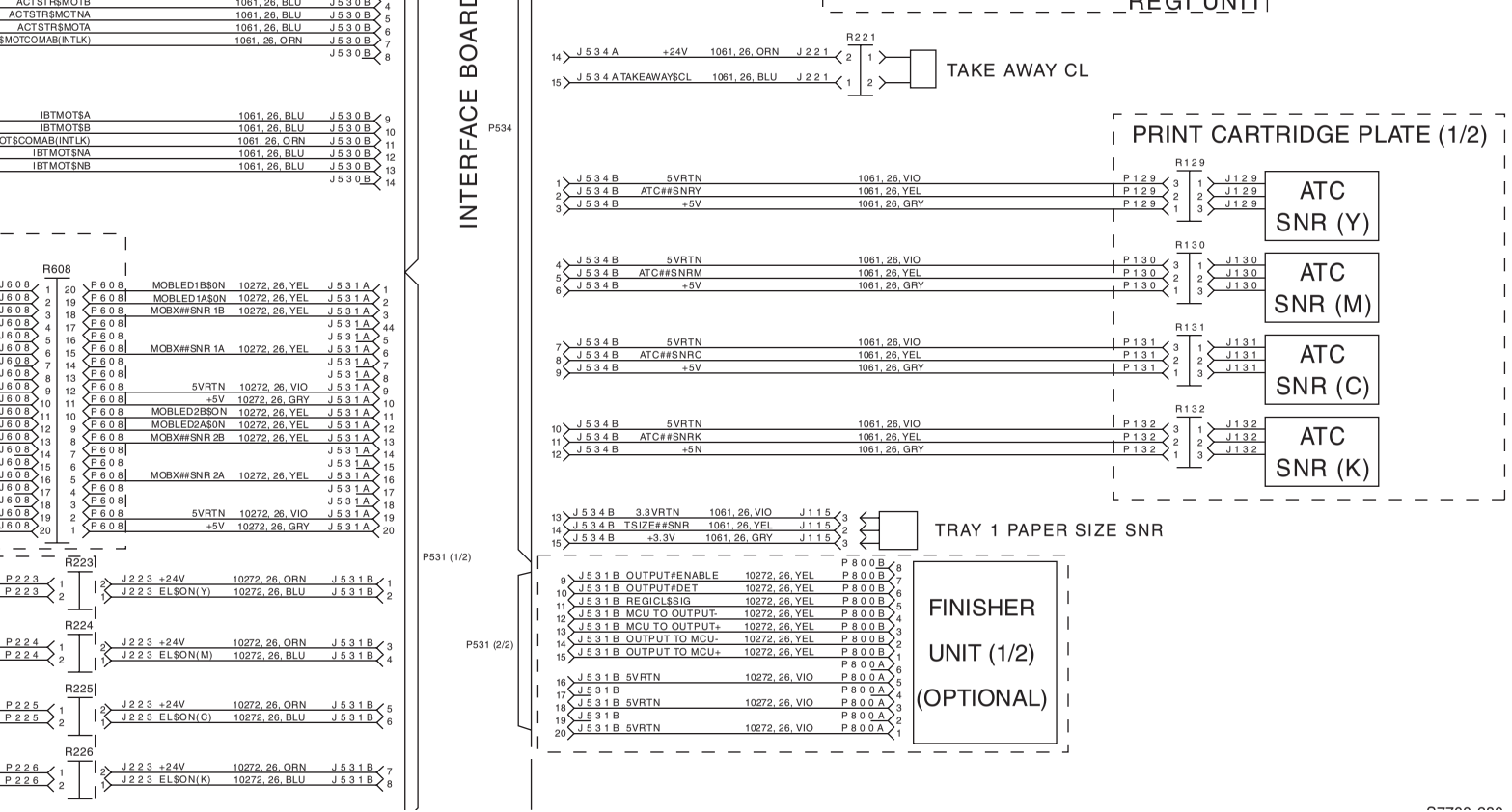
INTERFACE BOARD
P534
REGI UNIT
R221
TAKE AWAY CL
PRINT CARTRIDGE PLATE (1/2)
R129
ATC SNR (Y)
R130
ATC SNR (M)
R131
ATC SNR (C)
R132
ATC SNR (K)
TRAY 1 PAPER SIZE SNR
P531 (1/2)
P531 (2/2)
FINISHER UNIT (1/2) (OPTIONAL)
R608
R223
R224
R225
R226

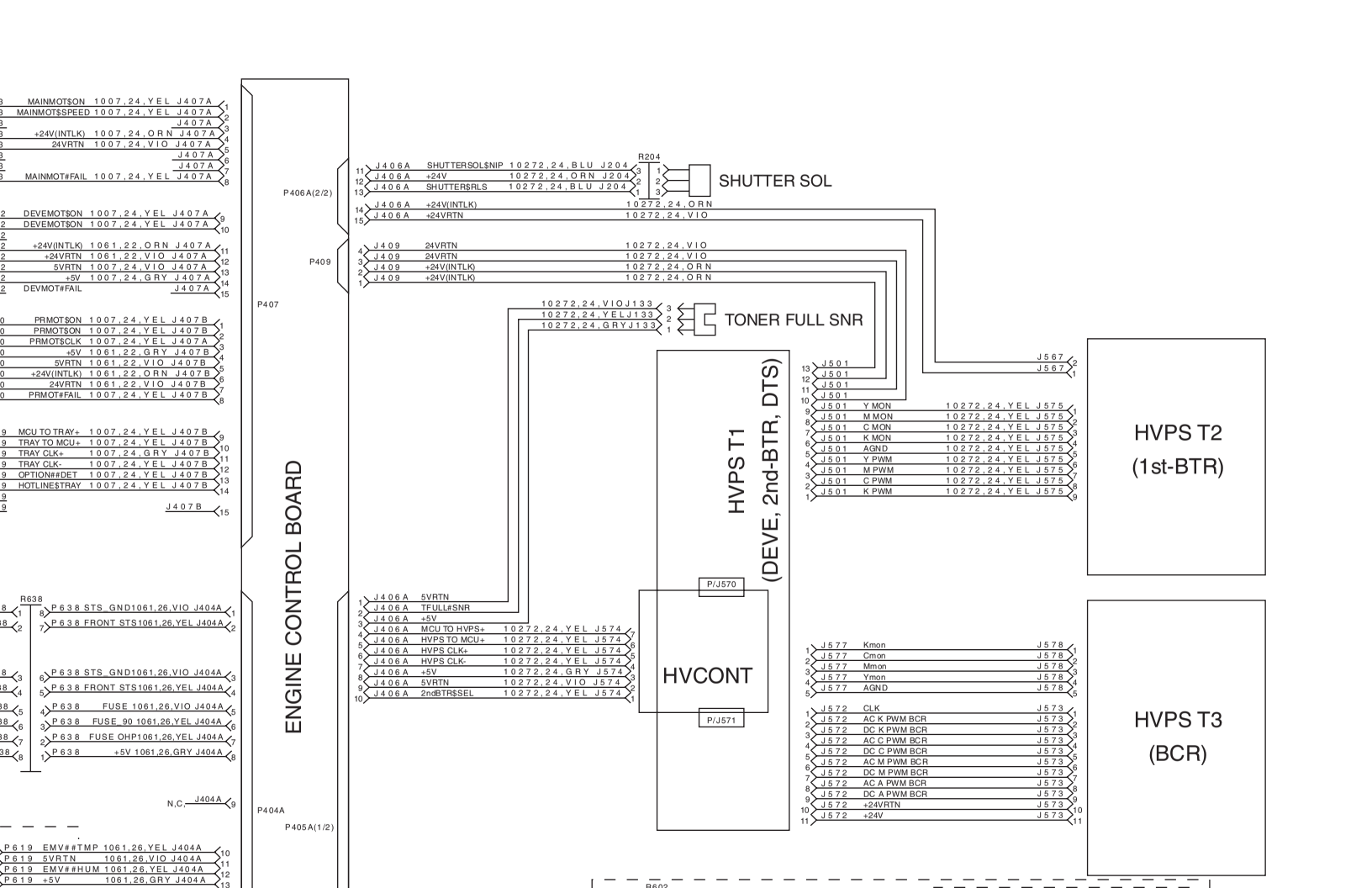
ENGINE CONTROL BOARD
P406A(2/2)
P409
P407
P404A
P405A(1/2)
J406A SHUTTERSOL$NIP 10272,24,BLU J204
J406A +24V 10272,24,ORN J204
J406A SHUTTER$RLS 10272,24,BLU J204
R204
SHUTTER SOL
J406A +24V(INTLK) 10272,24,ORN
J406A +24VRTN 10272,24,VIO
J409 24VRTN 10272,24,VIO
J409 24VRTN 10272,24,VIO
J409 +24V(INTLK) 10272,24,ORN
J409 +24V(INTLK) 10272,24,ORN
10272,24,VIOJ133
10272,24,YELJ133
10272,24,GRYJ133
TONER FULL SNR
HVPS T1
(DEVE, 2nd-BTR, DTS)
HVCONT
P/J570
P/J571
J406A 5VRTN
J406A TFULL#SNR
J406A +5V
J406A MCU TO HVPS+ 10272,24,YEL J574
J406A HVPS TO MCU+ 10272,24,YEL J574
J406A HVPS CLK+ 10272,24,YEL J574
J406A HVPS CLK- 10272,24,YEL J574
J406A +5V 10272,24,GRY J574
J406A 5VRTN 10272,24,VIO J574
J406A 2ndBTR$SEL 10272,24,YEL J574
J501 Y MON 10272,24,YEL J575
J501 M MON 10272,24,YEL J575
J501 C MON 10272,24,YEL J575
J501 K MON 10272,24,YEL J575
J501 AGND 10272,24,YEL J575
J501 Y PWM 10272,24,YEL J575
J501 M PWM 10272,24,YEL J575
J501 C PWM 10272,24,YEL J575
J501 K PWM 10272,24,YEL J575
J567
J567
HVPS T2
(1st-BTR)
J577 Kmon J578
J577 Cmon J578
J577 Mmon J578
J577 Ymon J578
J577 AGND J578
J572 CLK J573
J572 AC K PWM BCR J573
J572 DC K PWM BCR J573
J572 AC C PWM BCR J573
J572 DC C PWM BCR J573
J572 AC M PWM BCR J573
J572 DC M PWM BCR J573
J572 AC A PWM BCR J573
J572 DC A PWM BCR J573
J572 +24VRTN J573
J572 +24V J573
HVPS T3
(BCR)
R638
P638 STS_GND1061,26,VIO J404A
P638 FRONT STS1061,26,YEL J404A
P638 STS_GND1061,26,VIO J404A
P638 FRONT STS1061,26,YEL J404A
P638 FUSE 1061,26,VIO J404A
P638 FUSE_90 1061,26,YEL J404A
P638 FUSE OHP1061,26,YEL J404A
P638 +5V 1061,26,GRY J404A
N,C, J404A
P619 EMV##TMP 1061,26,YEL J404A
P619 5VRTN 1061,26,VIO J404A
P619 EMV##HUM 1061,26,YEL J404A
P619 +5V 1061,26,GRY J404A
MAINMOT$ON 1007,24,YEL J407A
MAINMOT$SPEED 1007,24,YEL J407A
J407A
+24V(INTLK) 1007,24,ORN J407A
24VRTN 1007,24,VIO J407A
J407A
J407A
MAINMOT#FAIL 1007,24,YEL J407A
DEVEMOT$ON 1007,24,YEL J407A
DEVEMOT$ON 1007,24,YEL J407A
+24V(INTLK) 1061,22,ORN J407A
+24VRTN 1061,22,VIO J407A
5VRTN 1007,24,VIO J407A
+5V 1007,24,GRY J407A
DEVMOT#FAIL J407A
PRMOT$ON 1007,24,YEL J407B
PRMOT$ON 1007,24,YEL J407B
PRMOT$CLK 1007,24,YEL J407A
+5V 1061,22,GRY J407B
5VRTN 1061,22,VIO J407B
+24V(INTLK) 1061,22,ORN J407B
24VRTN 1061,22,VIO J407B
PRMOT#FAIL 1007,24,YEL J407B
MCU TO TRAY+ 1007,24,YEL J407B
TRAY TO MCU+ 1007,24,YEL J407B
TRAY CLK+ 1007,24,GRY J407B
TRAY CLK- 1007,24,YEL J407B
OPTION##DET 1007,24,YEL J407B
HOTLINE$TRAY 1007,24,YEL J407B
J407B

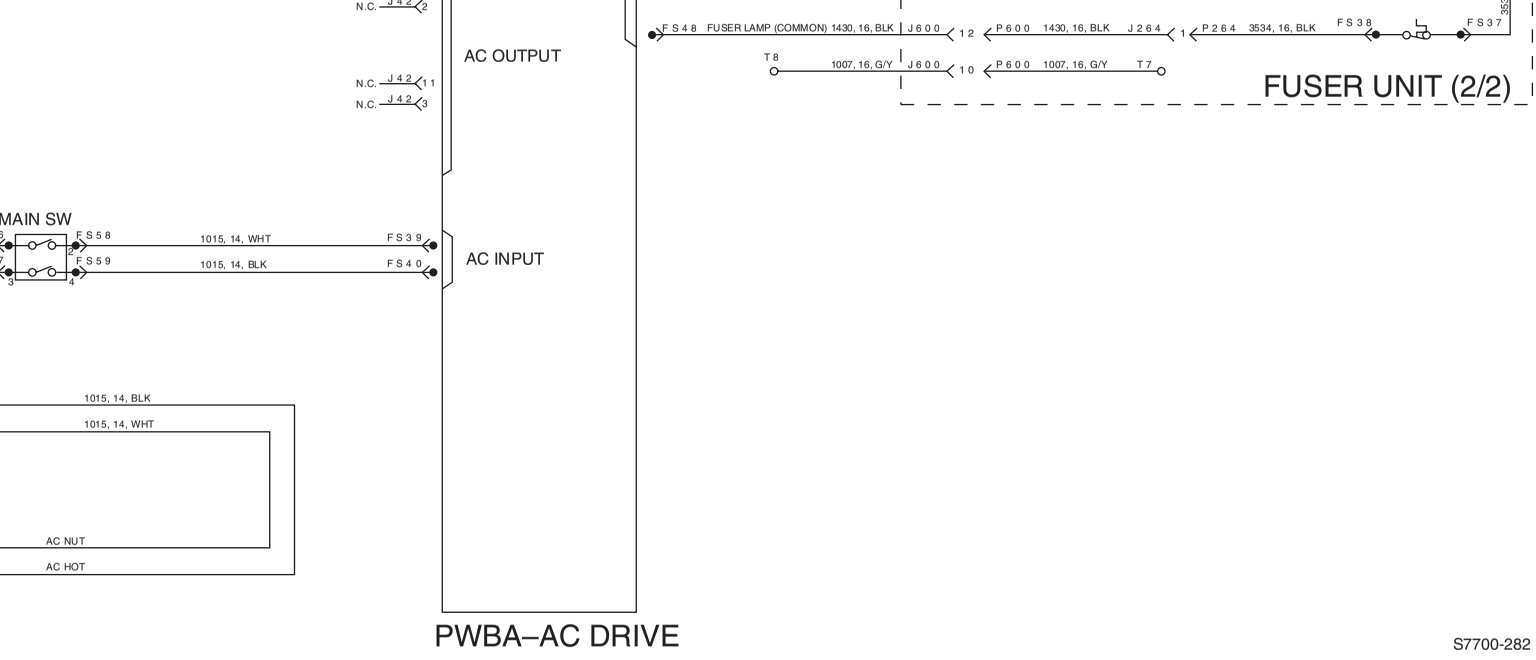
N.C. J42 2
AC OUTPUT
N.C. J42 1
N.C. J42 3
MAIN SW
FS58
1015, 14, WHT
FS39
FS59
1015, 14, BLK
FS40
AC INPUT
1015, 14, BLK
1015, 14, WHT
AC NUT
AC HOT
PWBA–AC DRIVE
FS48 FUSER LAMP (COMMON) 1430, 16, BLK J600 12 P600 1430, 16, BLK J264 1 P264 3534, 16, BLK FS38 FS37
T8 1007, 16, G/Y J600 10 P600 1007, 16, G/Y T7
FUSER UNIT (2/2)

S7700-282

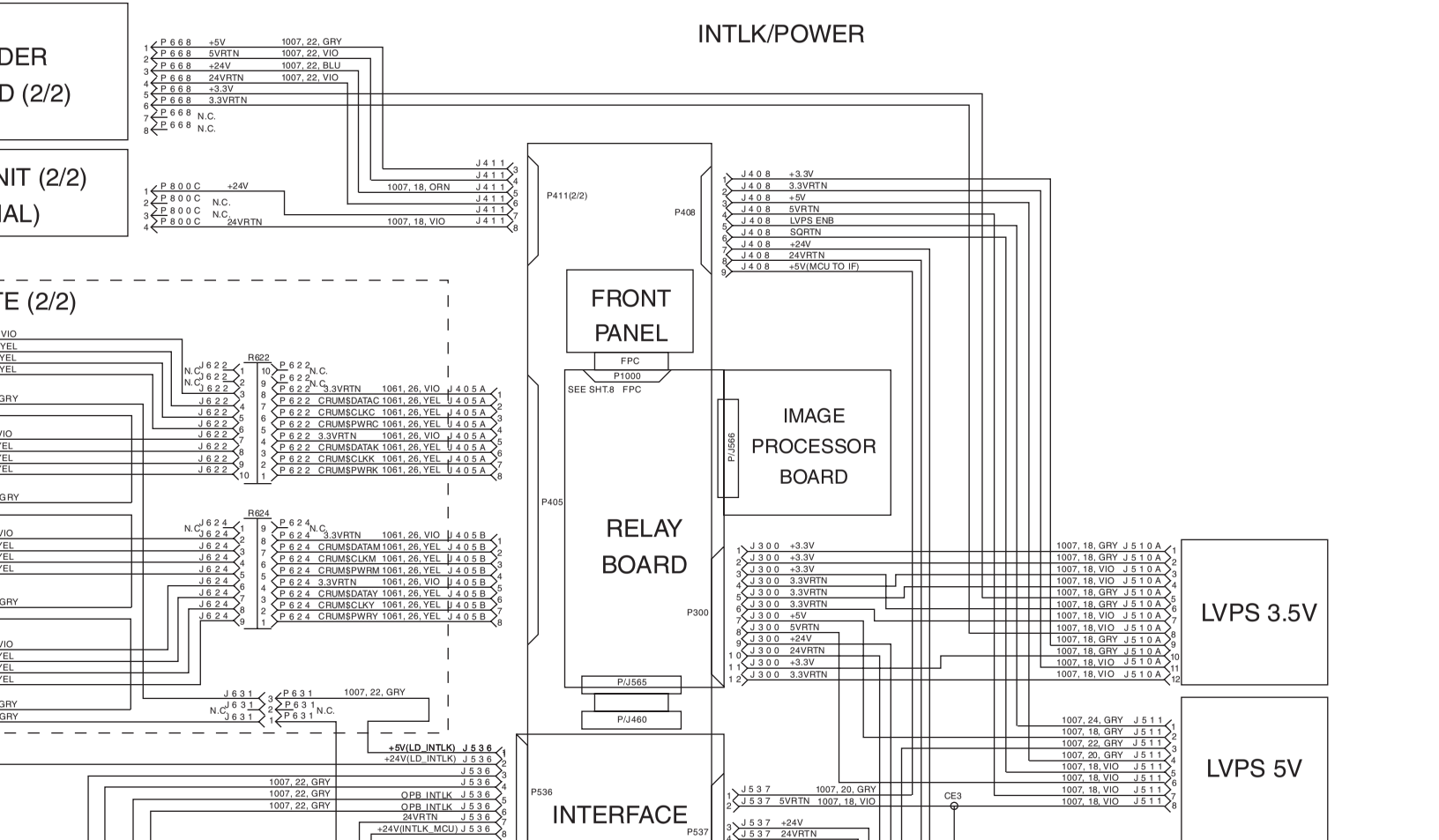
INTLK/POWER
DER
D (2/2)
NIT (2/2)
AL)
TE (2/2)
P668 +5V 1007, 22, GRY
P668 5VRTN 1007, 22, VIO
P668 +24V 1007, 22, BLU
P668 24VRTN 1007, 22, VIO
P668 +3.3V
P668 3.3VRTN
P668 N.C.
P668 N.C.
P800C +24V
P800C N.C.
P800C N.C.
P800C 24VRTN
1007, 18, ORN
1007, 18, VIO
J411
P411(2/2)
P408
J408 +3.3V
J408 3.3VRTN
J408 +5V
J408 5VRTN
J408 LVPS ENB
J408 SQRTN
J408 +24V
J408 24VRTN
J408 +5V(MCU TO IF)
FRONT PANEL
FPC
P1000
SEE SHT.8 FPC
IMAGE PROCESSOR BOARD
P/J566
P405
RELAY BOARD
P300
P/J565
P/J460
R622
R624
P622
P624
J622
J624
3.3VRTN 1061, 26, VIO J405A
CRUM$DATAC 1061, 26, YEL J405A
CRUM$CLKC 1061, 26, YEL J405A
CRUM$PWRC 1061, 26, YEL J405A
3.3VRTN 1061, 26, VIO J405A
CRUM$DATAK 1061, 26, YEL J405A
CRUM$CLKK 1061, 26, YEL J405A
CRUM$PWRK 1061, 26, YEL J405A
3.3VRTN 1061, 26, VIO J405B
CRUM$DATAM 1061, 26, YEL J405B
CRUM$CLKM 1061, 26, YEL J405B
CRUM$PWRM 1061, 26, YEL J405B
3.3VRTN 1061, 26, VIO J405B
CRUM$DATAY 1061, 26, YEL J405B
CRUM$CLKY 1061, 26, YEL J405B
CRUM$PWRY 1061, 26, YEL J405B
J631
P631
1007, 22, GRY
N.C.
+5V(LD_INTLK) J536
+24V(LD_INTLK) J536
J536
1007, 22, GRY
OPB_INTLK J536
24VRTN J536
+24V(INTLK_MCU) J536
P536
INTERFACE
P537
J300 +3.3V
J300 3.3VRTN
J300 5VRTN
J300 +24V
J300 24VRTN
1007, 18, GRY J510A
1007, 18, VIO J510A
LVPS 3.5V
J537 1007, 20, GRY
J537 5VRTN 1007, 18, VIO
J537 +24V
J537 24VRTN
CE3
1007, 24, GRY J511
1007, 18, GRY J511
1007, 22, GRY J511
1007, 20, GRY J511
1007, 18, VIO J511
LVPS 5V

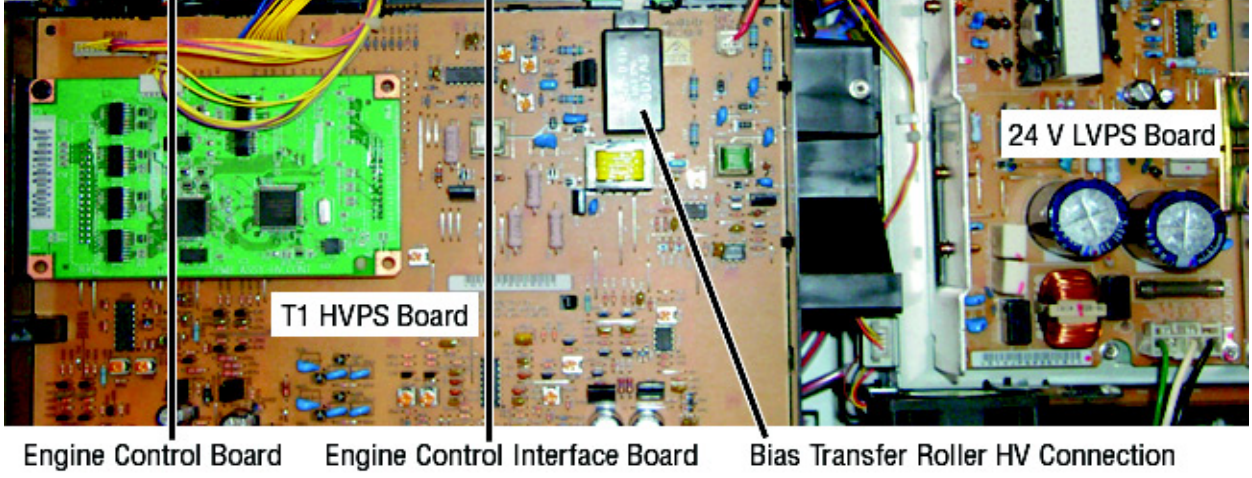


Control Board, and 24 VDC LVPS Board (rear view of printer)

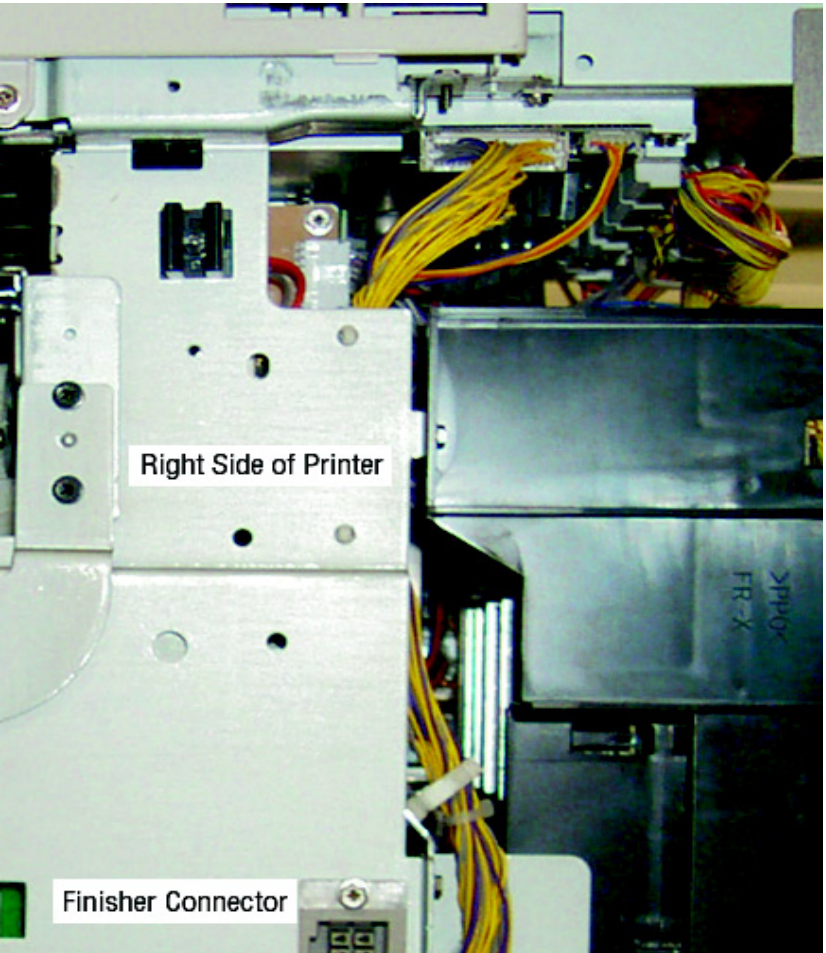
Right Side of Printer
Finisher Connector

Toner Dispense Base Assembly
K

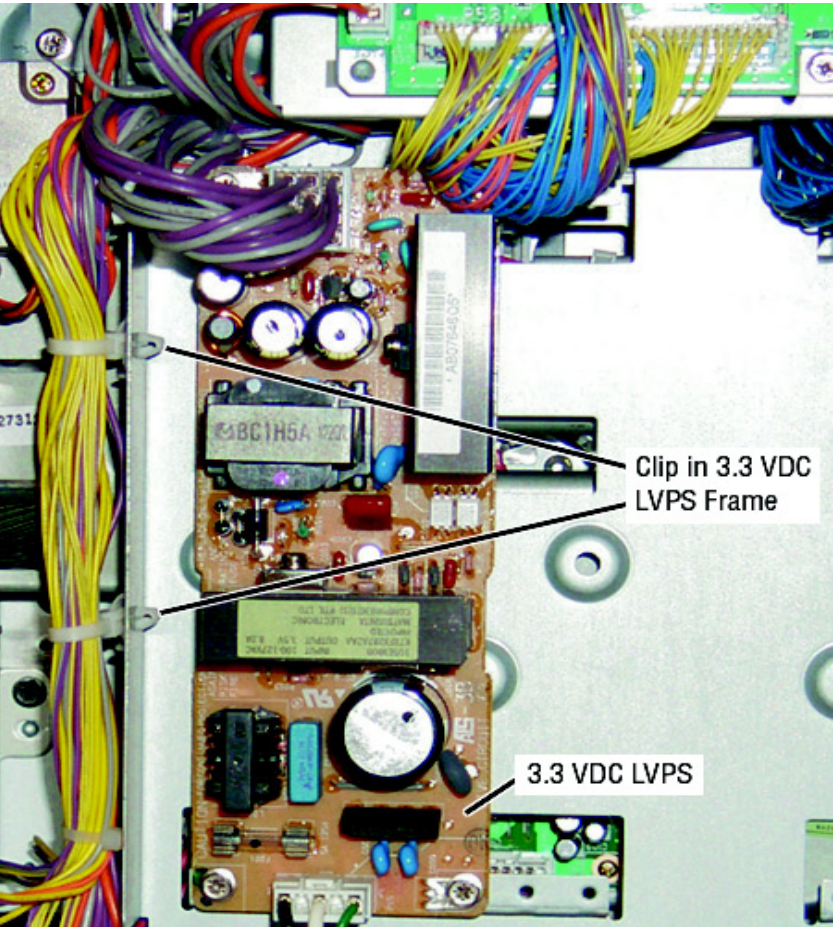
Clip in 3.3 VDC
LVPS Frame
3.3 VDC LVPS

tors (rear of printer)

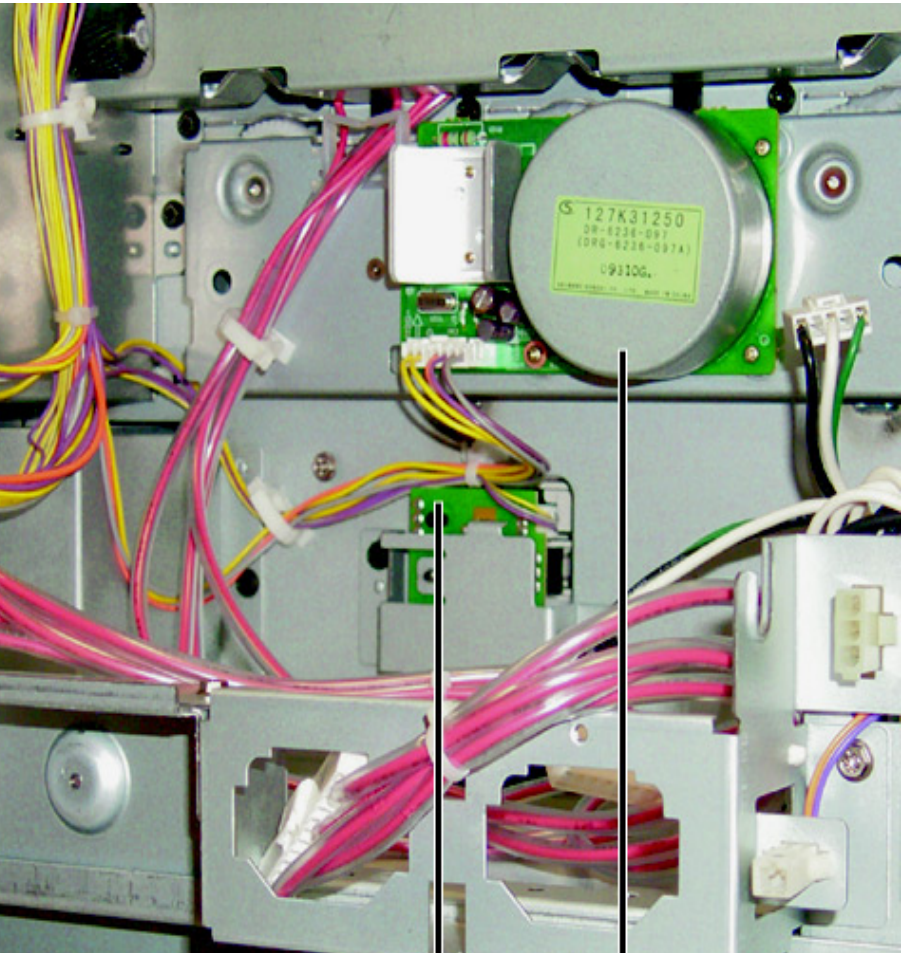
127K31250
DR-6236-097
(DRG-6236-097A)
0931OG.

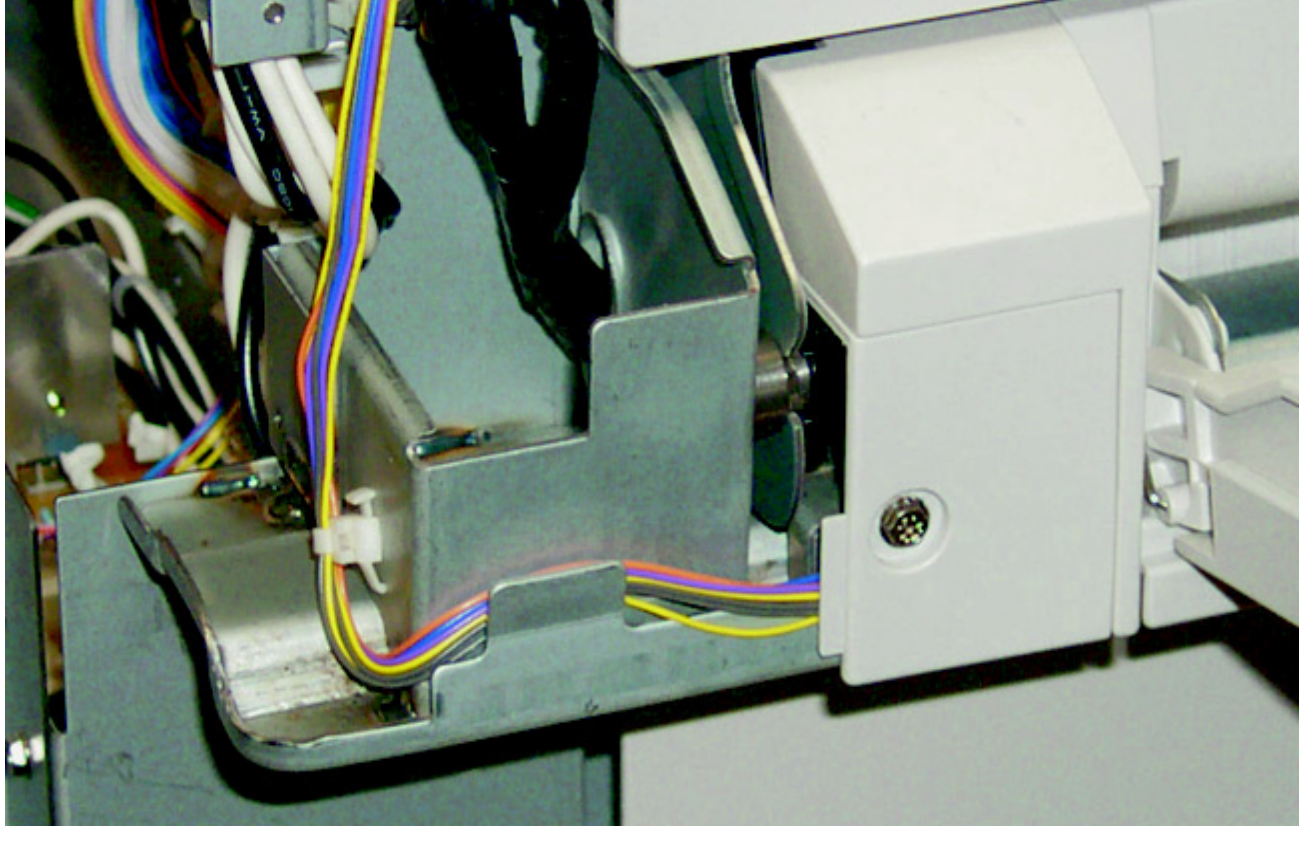

(MPT) and Left-Hand Cover Assembly (LH Door)

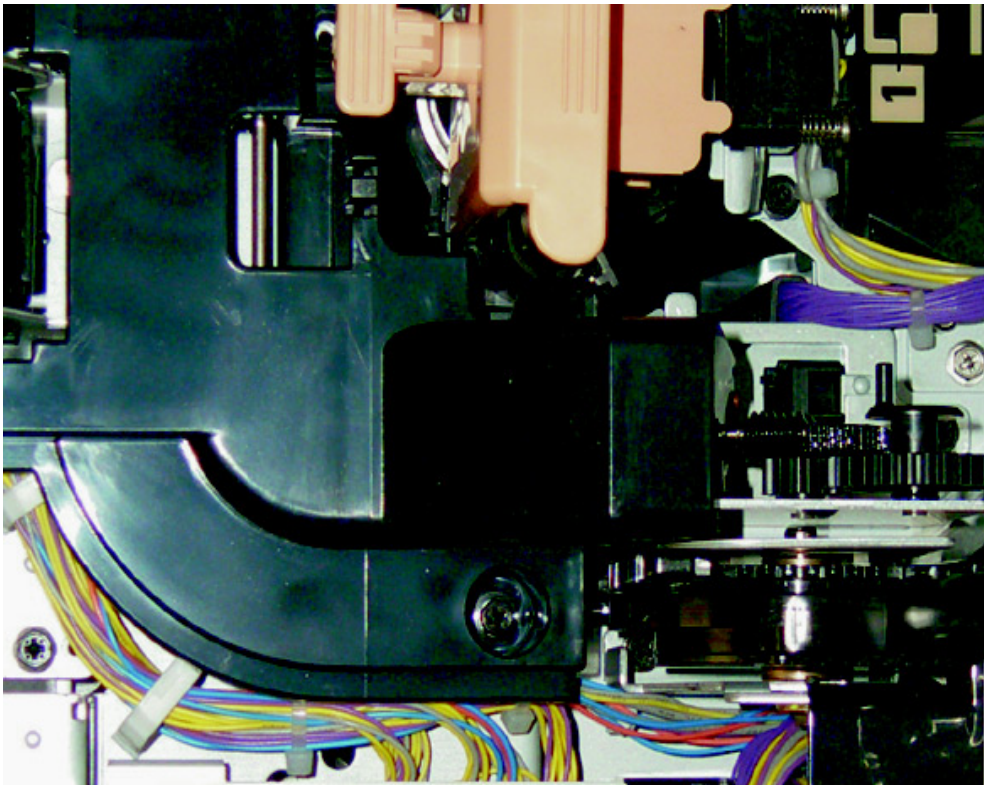

**ly Board and Lower Tray Motor Assembly**

# Phaser 7700 Finisher

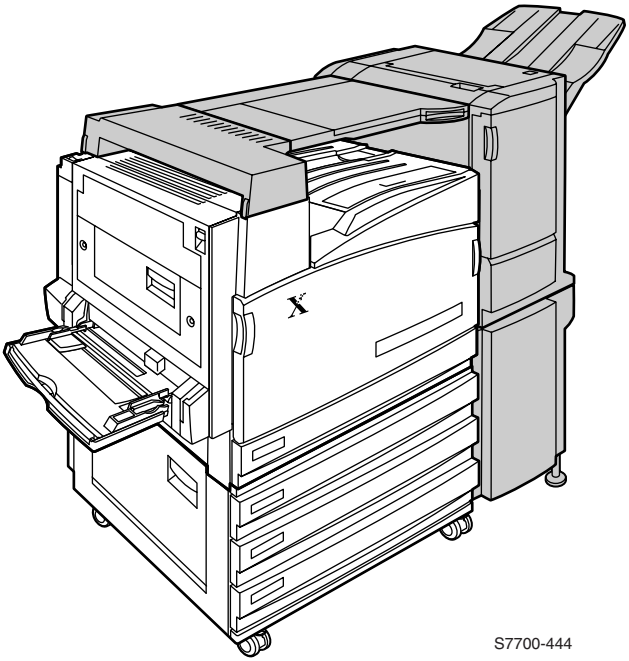


**Figure 11-1 Phaser 7700 Color Laser Printer with the Finisher Option**

This Service Manual contains information useful in troubleshooting, repair and maintenance of the **Finisher Option** for the Xerox Phaser 7700 Color Laser Printer. This manual contains a Field Replacement Unit Parts List (FRU) and Removal and Replacement Procedures (RRPs).

For information on troubleshooting and error codes for the finisher option see “Diagnostics, Error Codes and Messages” on page 2-31.

Topics, such as the Finisher theory of operation and Configuration Page details, etc., are located on the companion *Printer Service & Support Resources CD-ROM*.

## Finisher Overview

- The Finisher is a customer installed option that contains a Horizontal Transport, Stapler, Compiler, and Stacker.
- The Finisher docks with the Print Engine and Finisher Stand.
- The Finisher’s built in power supply takes +24 VDC from the printer and provides all the DC voltages required.

**Table 11-1 Finisher Specifications**

| Category | Specification |
|---|---|
| Configuration | User installed option. The Finisher provides stapling (up to 50 sheets), print job offset and stacking up to 1,000 sheets of paper. The Finisher docks with the Printer and Stand. All Finisher operations are controlled by the Finisher Control Board. |
| Paper Feed | Paper leaving the Exit section of the Printer is fed to the Paper catch area then directly into the Horizontal Transport. The Horizontal Transport then delivers the paper to the Finisher where stapling, offsetting (jogging) and stacking occur. |
| Power Requirements | The Printer provides +24 VDC to the Finisher. The Finisher's power supply provides all required DC voltages throughout the Finisher Option.<br>The Phaser 7700 Light Finisher shall meet FCC part 15, subpart B, Class A. CISPR22 Class A. |
| Dimensions:<br>Height<br>Width<br>Weight | |

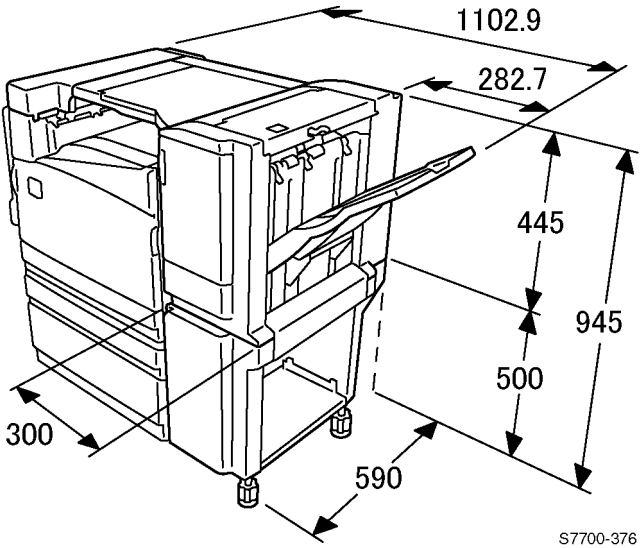


**Figure 11-2 Dimensions of the Finisher**

**Table 11-1 Finisher Specifications (cont'd.)**

| Category | Specification | |
|---|---|---|
| Media Types | Long-Edge Feed (LEF)<br>B5A3<br>A4A4<br>LetterB4<br>8” x 10”<br>Letter<br>US Folio<br>Legal<br><br>Tabloid | Short-Edge Feed (SEF) |
| Media Weight | 64 - 105 g/$m^2$ (Thick/Thin paper) | |
| Stacker Capacity | 1000 non-stapled sheets (20 lb. paper, letter/A4 or smaller)<br>500 unstapled sheets (20 lb. paper, over size Letter/A4)<br>300 unstapled sheets (Mix Stack / loading large on small)<br>50 stapled sets | |
| Staple Cartridge Capacity | 5000 staples | |

# Assemblies of the Finisher

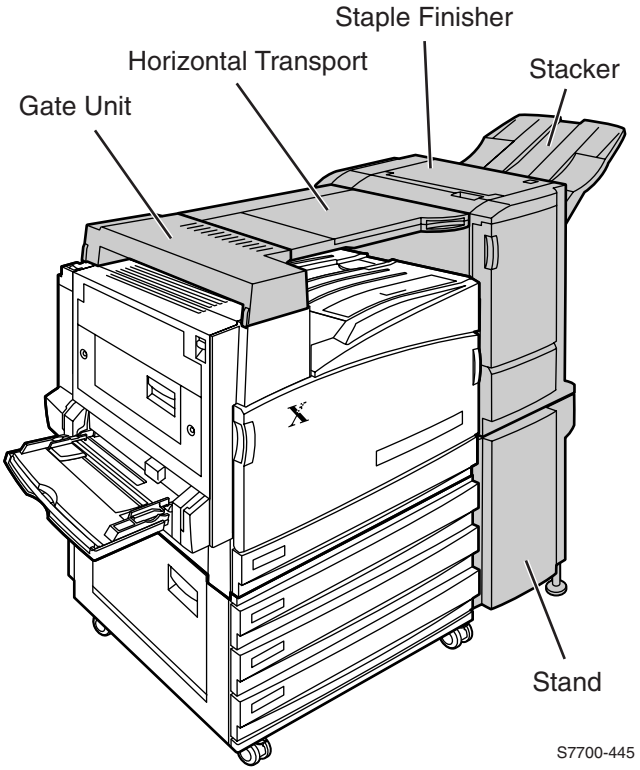


**Figure 11-3 Assemblies of the Finisher**

# Internal Assemblies of the Finisher

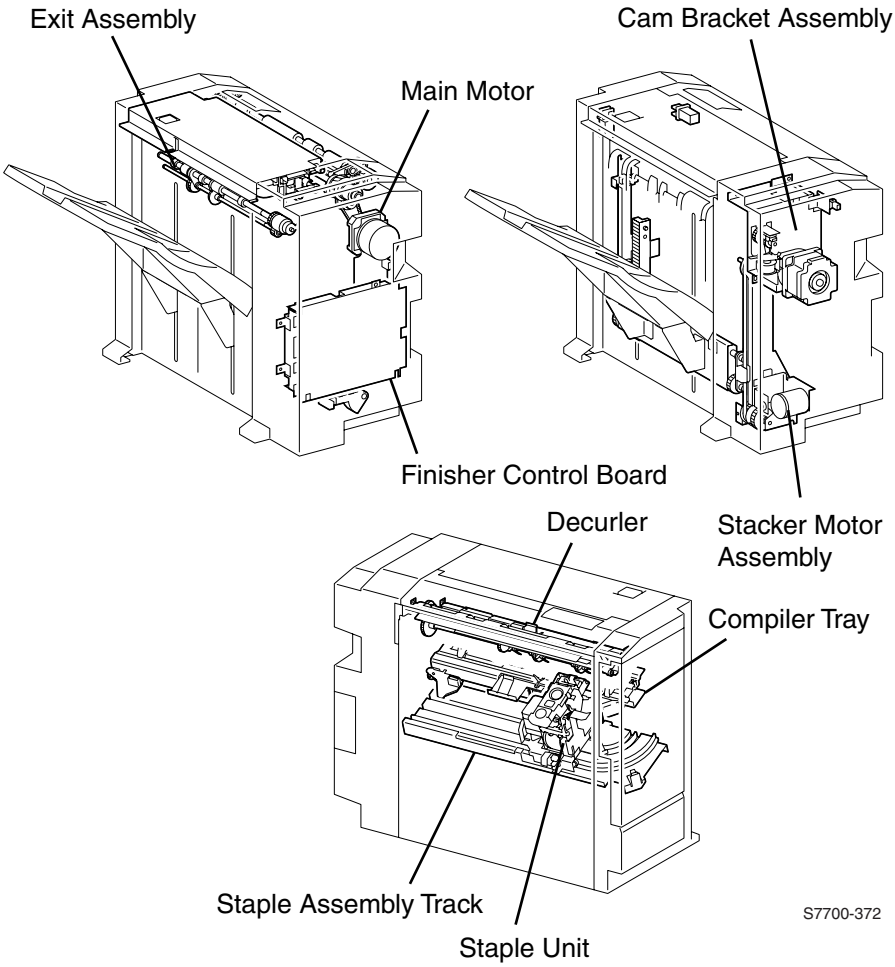


**Figure 11-4 Internal Assemblies of the Finisher**

# Horizontal Transport Sensor, Interlock, and Switch Locator Map

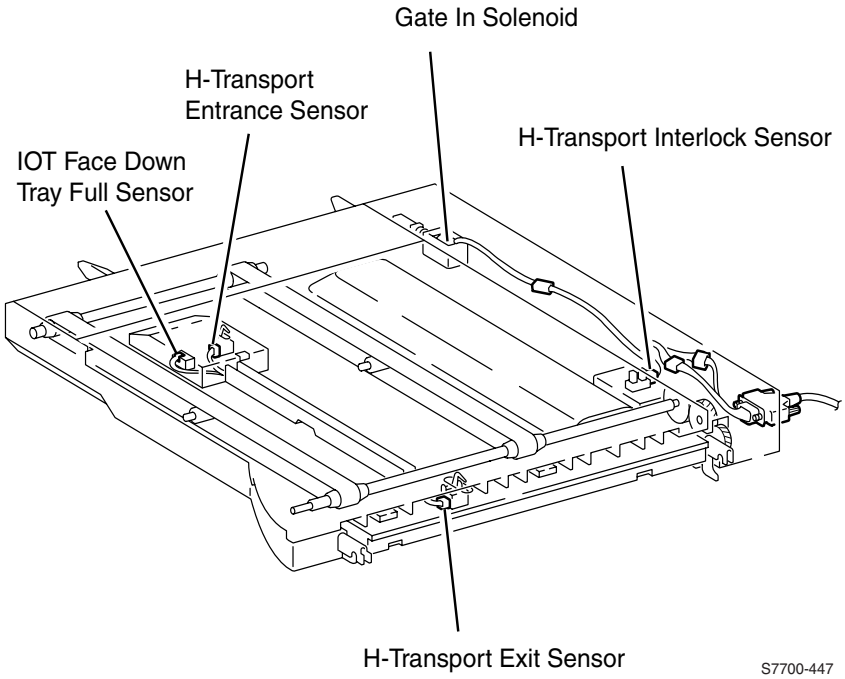


**Figure 11-5 Horizontal Transport Sensor, Interlock and Switch Locator Map**

# Finisher Sensor, Interlock, and Switch Locator Map

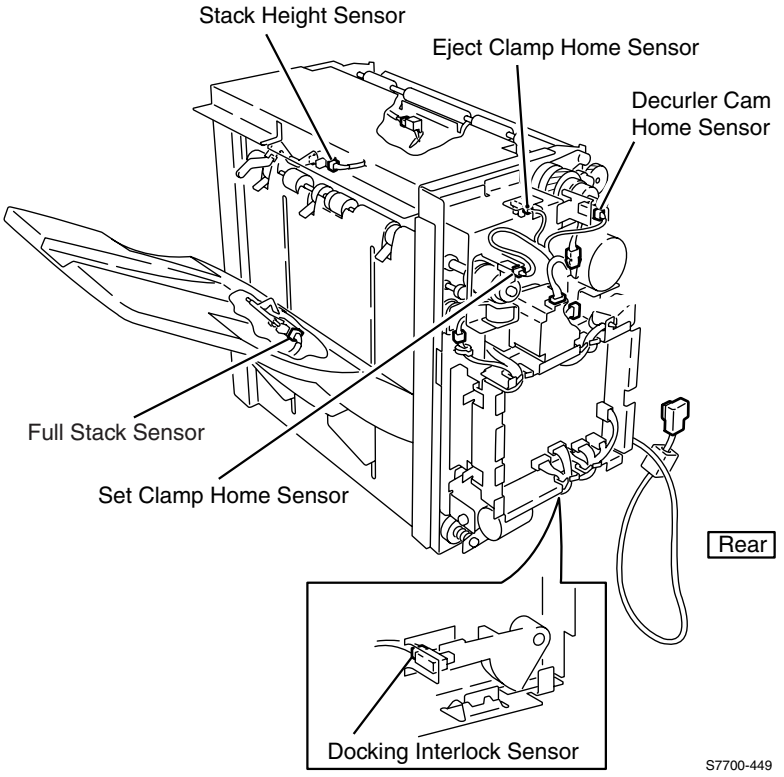


**Figure 11-6 Finisher Sensor, Interlock, and Switch Locator Map**

# Finisher Sensor, Interlock, and Switch Locator Map

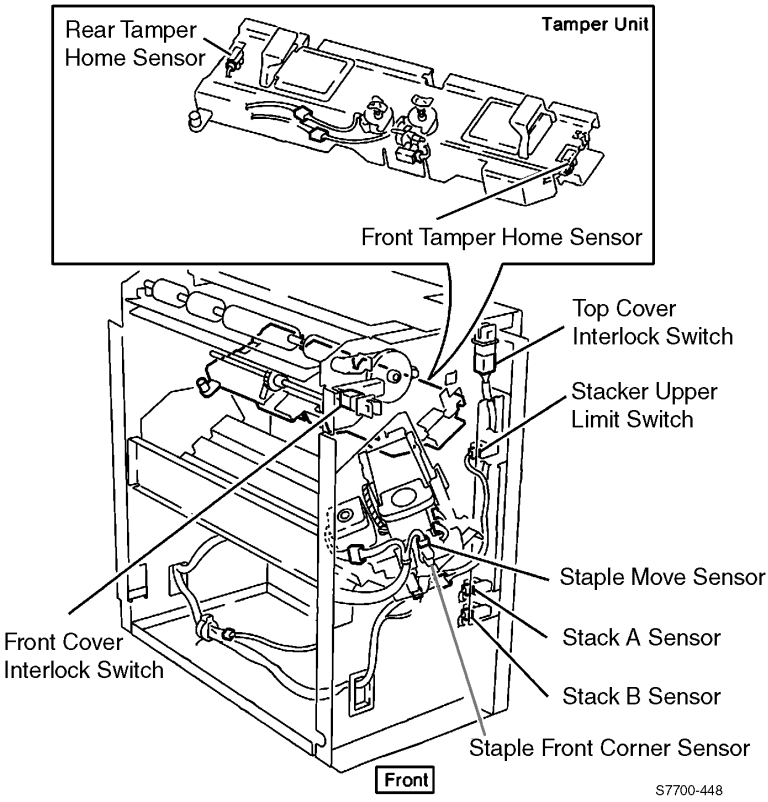


**Figure 11-7 Finisher Sensor, Interlock, and Switch Locator**

Blank Page

# Removal and Replacement Procedures

This section details the removal and replacement procedures for the main assemblies of the Phaser 7700 Light Finisher.

When replacing sensors, actuators, interlocks and/or switches:

- Refer to the appropriate Locator Map to identify the sensor.
- Remove the necessary cover (RRP 67, on page 11-325).
- Press down on the two locking tabs located at the top of the sensor, press up on the two locking tabs at the bottom of the sensor and remove the sensor.

# RRP 66 Horizontal Transport Assembly

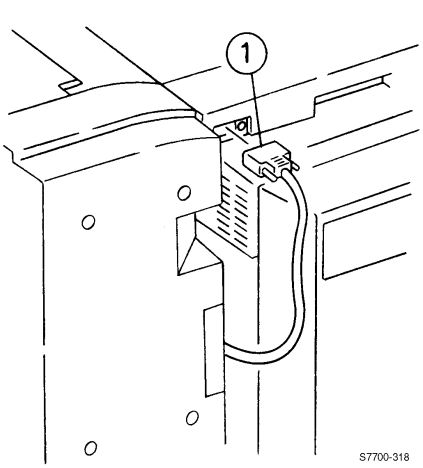


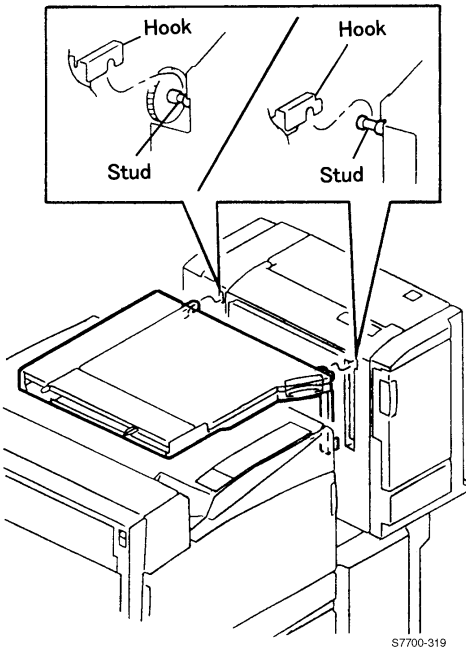


**Figure 11-8 Horizontal Transport Assembly**

## Removal

1. Unplug the Finisher from the printer.
2. Lift the two hooks securing the Horizontal Transport Assembly to the Finisher.
3. Remove the Horizontal Transport Assembly.

# RRP 67 Horizontal Transport Top Open, Front, and Rear Cover

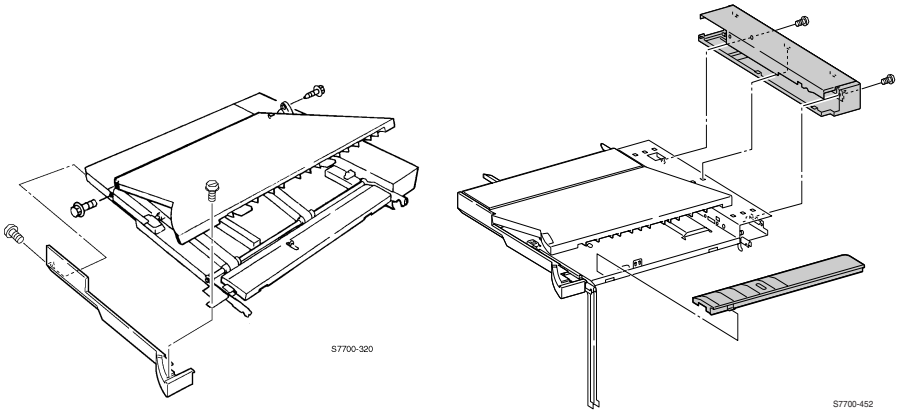


**Figure 11-9 H-Transport Top Open, Front and Rear Covers**

## Removal

1. Remove the Horizontal Transport Assembly (RRP 66, on page 11-324).
2. Remove one screw securing the stopper.
3. Remove two screws from the Horizontal Transport Front Cover and remove the cover.
4. Remove the hinge screw and remove the Top Open Cover.
5. Remove two screws securing the Horizontal Transport Rear Cover.
6. Remove the Horizontal Transport Entrance Upper Cover Assembly.
7. Remove the Horizontal Transport Exit Guide by pressing on the tabs on the lower right edge of the Horizontal Transport Frame.
8. Remove the Upper Rear Cover.

# RRP 68 Horizontal Transport Entrance Upper Cover Assembly

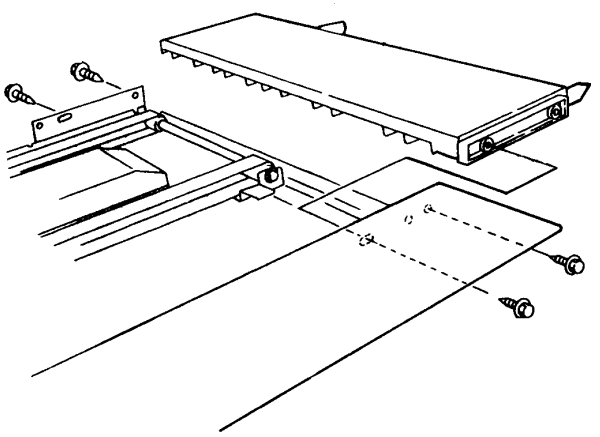


**Figure 11-10 Horizontal Transport Entrance Upper Cover**

## Removal

1. Remove the Horizontal Transport Assembly (RRP 66, on page 11-324).
2. Remove the Front Cover (RRP 67, on page 11-325).
3. Remove two screws securing the Rear Cover and remove.
4. Remove the Gate-In Solenoid Assembly.
5. Remove four screws securing the Entrance Upper Cover Assembly.

# RRP 69 Horizontal Transport Belts

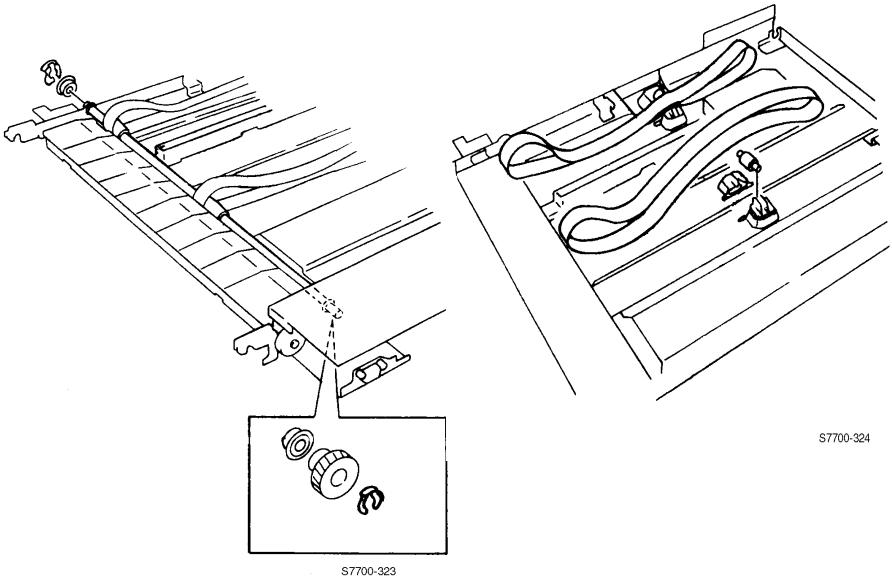


**Figure 11-11 Horizontal Transport Belts**

## Removal

1. Remove the Horizontal Transport Covers (RRP 67, on page 11-325).
2. Remove the KL-clips from the horizontal transport In and Out.
3. Remove the bearings from the horizontal transport In and Out shafts.
4. Remove one end of each horizontal transport belt roller support.
5. Remove the belts.

## Replacement

**Note** When reinstalling the belts, ensure that the textured side is out.

**Note** If necessary, remove the KL-clip and gear from the out roller to reinstall the belts to help install the bearing.

# RRP 70 Horizontal Transport Entrance Sensor and Top Tray Full Sensor

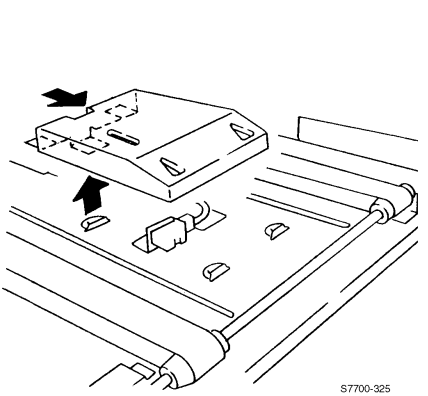


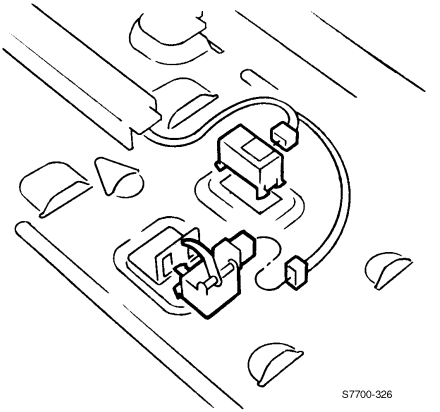


**Figure 11-12 H-Tra Entrance and Top Tray Full Sensor**

## Removal

1. Remove the Horizontal Transport Top Open and Front Cover (RRP 67, on page 11-325).
2. Remove the two screws securing the Horizontal Transport Entrance Upper Cover (RRP 68, on page 11-326).
3. Remove the Entrance Sensor Cover, pry up on the locking tab while pressing firmly towards the entrance end of the transport.
4. Disconnect the wiring harness connector.
5. Press down on the two locking tabs located at the top of the sensor, press up on the two locking tabs at the bottom of the sensor and remove the sensor.

## Top Tray Sensor

1. Disconnect the wiring harness.
2. Remove one screw and remove the sensor bracket and sensor.

## Replacement

**Note** When replacing the sensor be sure the harness guide is engaged into the cover.

# RRP 71 Gate-In Solenoid Assembly

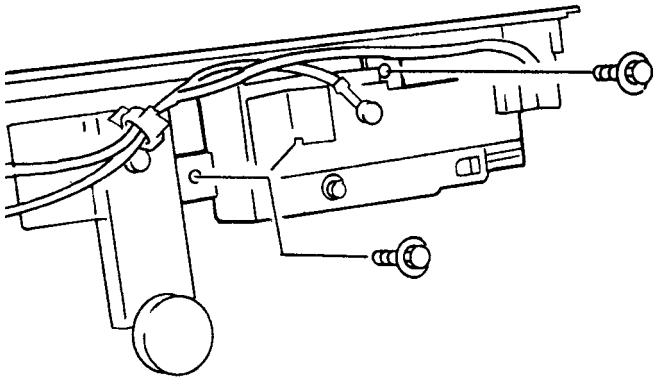

S7700-375

**Figure 11-13 H-Transport Gate-In Solenoid**

## Removal

1. Remove the Rear Cover (RRP 67, on page 11-325).
2. Disconnect the ground wire from the solenoid housing.
3. Remove the two screws and remove the Gate-In Solenoid Assembly.

# RRP 72 Finisher Covers

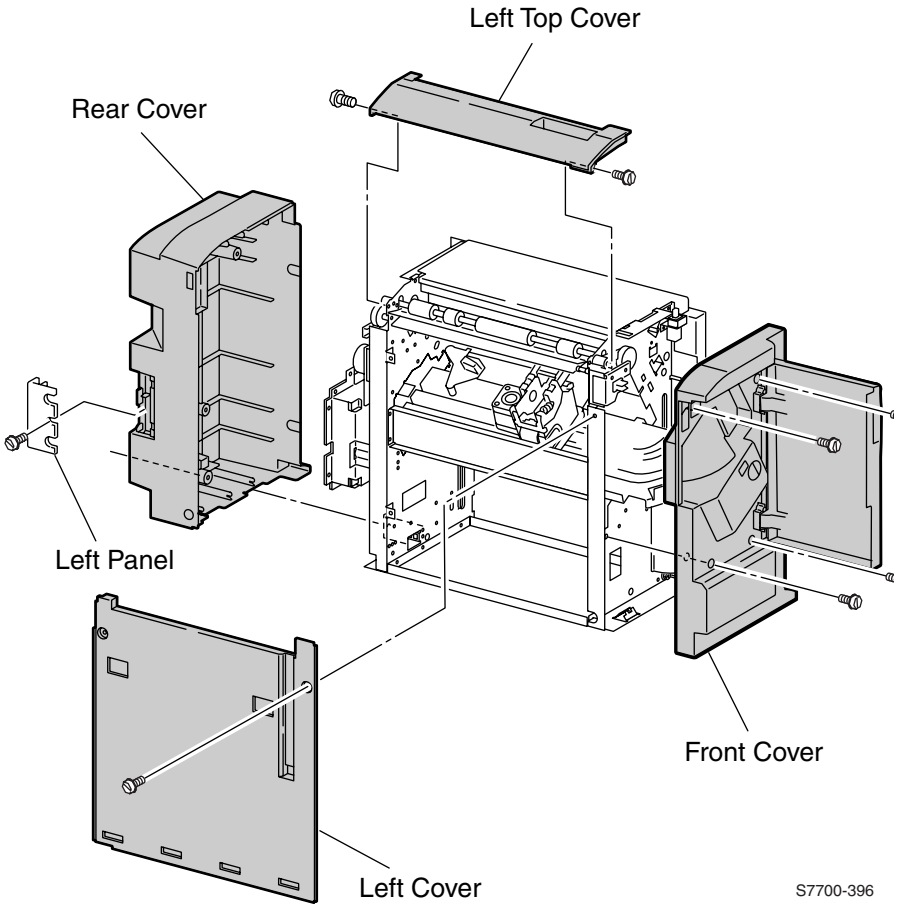


**Figure 11-14 Finisher Covers**

### Removal

1. Remove the Horizontal Transport Assembly (RRP 66, on page 11-324).
1. Remove one screw from the Left Panel and remove.
2. Remove five screws from the Rear Cover.
3. Clear the gear at the top of the Rear Cover and remove the cover.
4. Open the Front Door.
5. Remove four screws securing the front cover and remove.
6. Remove two screws from the Left Cover and lift up and out to remove.
7. Loosen the four screws securing the Top Cover.
8. Remove the left portion of the top cover assembly.
9. Open the top door and remove the front and back screws.
10. Pop off both straps, tilt the cover up and remove.

**Note** When installing the rear cover, be sure that the two cables exiting the rear cover are properly aligned around the plastic tab in the exit way. If not, the cables fall to the bottom of the exit way and the cable to the horizontal transport cannot reach the cable connector on the transport.

# RRP 73 Stack Height-Sensor Assembly

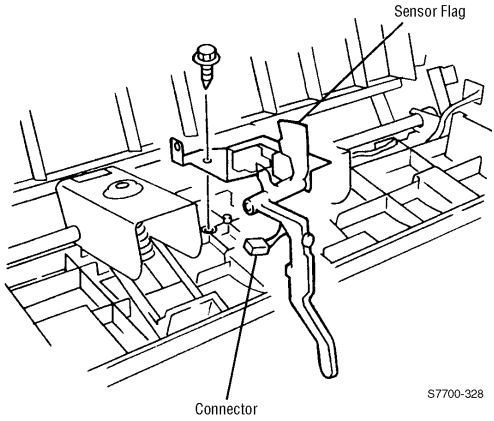


**Figure 11-15 Stack Height-Sensor Assembly**

## Removal

1. Remove the Horizontal Transport Assembly (RRP 66, on page 11-324).
2. Remove the Top Cover (RRP 72, on page 11-330).
3. Remove one screw from the Stack Height Sensor bracket.
4. Press down on the two locking tabs located at the top of the sensor, press up on the two locking tabs at the bottom of the sensor and remove the sensor.

# RRP 74 Stacker Paper-Sensor Assembly

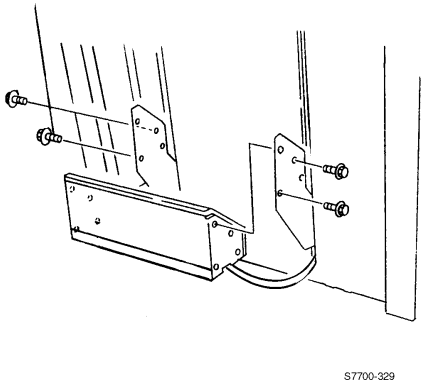


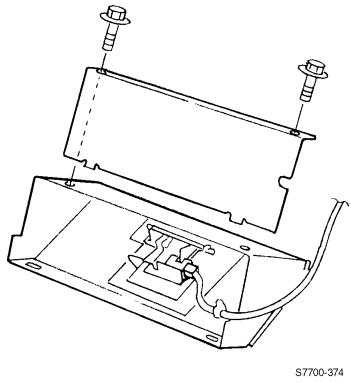


**Figure 11-16 Stacker Paper-Sensor Assembly**

## Removal

1. Loosen the thumb screw and remove the Stacker Tray.
2. Remove the four screws securing the Stacker Paper Sensor Assembly to the finisher.
3. Remove two screws from the bottom of the assembly.
4. Remove one screw on the sensor bracket.
5. Press down on the two locking tabs located at the top of the sensor, press up on the two locking tabs at the bottom of the sensor and remove the sensor.
6. Remove the connector from the sensor.

# RRP 75 Set Clamp Clutch and Gear

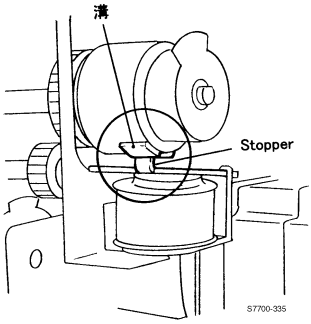


**Figure 11-17 Set Clamp Clutch and Gear**

## Removal

1. Remove the Rear Cover (RRP 72, on page 11-330).
2. Remove the set clamp actuator.
3. Remove one screw from the set clamp actuator retainer and remove.
4. Remove the clutch collar and clutch.
5. Remove the gear.

## Replacement

**Note** When replacing, after installing the clutch collar you need to depress the clutch solenoid and rotate the set clamp shaft 1/4 revolution Counter-Clockwise, then install the set clamp actuator. Rotate the clutch until the solenoid snaps into position.

# RRP 76 Eject Roll Assembly

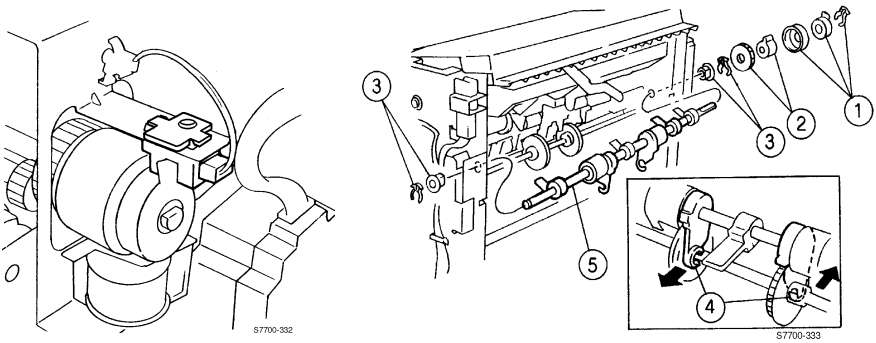


**Figure 11-18 Eject Roll**

## Removal

1. Remove the Rear and Left Covers (RRP 72, on page 11-330) .
2. Remove Stack Paper Sensor Assembly (RRP 73, on page 11-332).
3. Undo the intermediate connector.
4. Remove the Right Cover.
5. Remove the Set Clamp Clutch and Gear (RRP 75, on page 11-334).
6. Remove both KL-clips from the Set Clamp Shaft.
7. Push the bearings out of the frame assembly and remove the shaft.

# RRP 77 Finisher Control Board, Bracket, and Shield

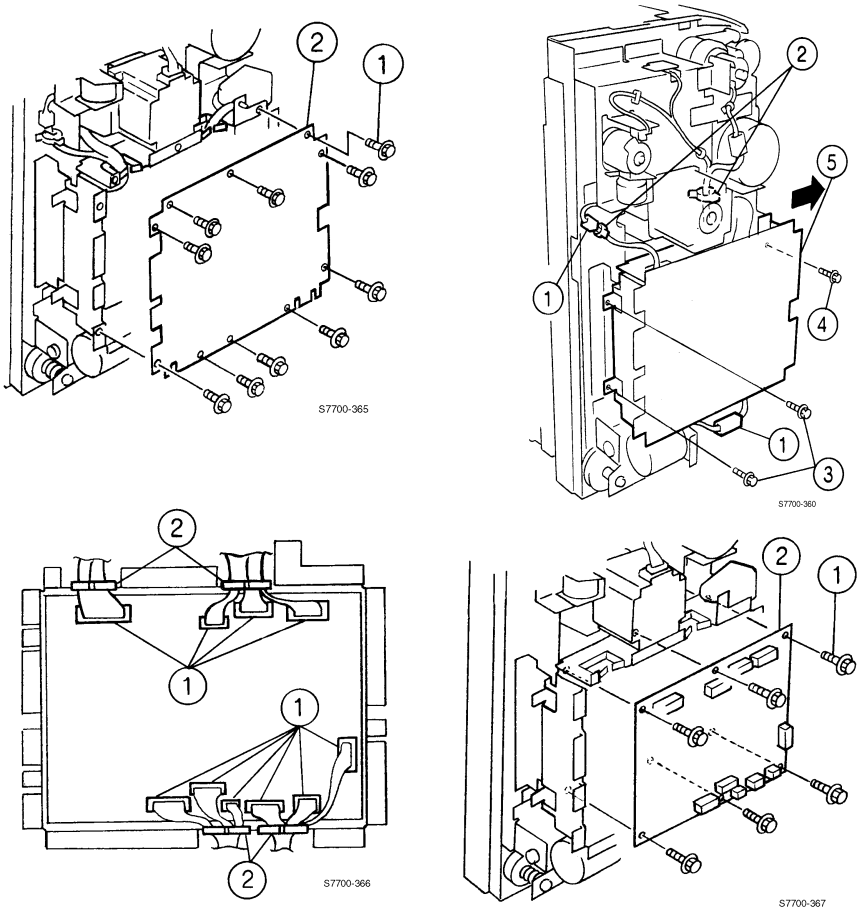


**Figure 11-19 Finisher Control Board, Bracket, and Shield**

### Removal

1. Remove the Rear Cover (RRP 72, on page 11-330).
2. Remove eight screws and loosen the two bottom screws.
3. Remove Finisher Control Board Shield.
4. Undo all the connectors.
5. Remove two screws on the left.
6. Loosen one screw on the right.
7. Undo one connector.
1. Loosen the outer screws located at the bottom of the Finisher Control Board cover.
2. Remove the eight remaining cover screws.
3. Remove the Finisher Control Board cover.
4. Remove the four wiring connectors.
5. Remove six screws from the control board remove.

**Note** When reinstalling the cover, do not insert screws into the second or fourth holes at the bottom of the cover as these are used to secure the outer cover.

# RRP 78 Stacker Motor Assembly

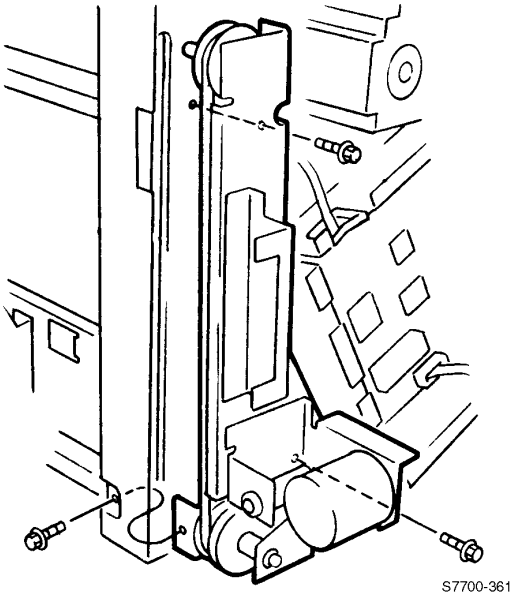


**Figure 11-20 Stacker Motor Assembly**

## Removal

1. Remove the Finisher Control Board Bracket and Shield (RRP 77, on page 11-336).
2. Remove one connector.
3. Remove three screws and remove the Stacker Motor Assembly.

**Note** When reinstalling, ensure the gear is engaged and the sensor for the stacker is tripped.

# RRP 79 Paddle Shaft

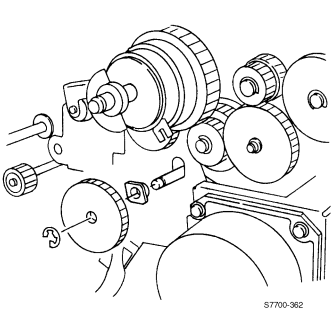


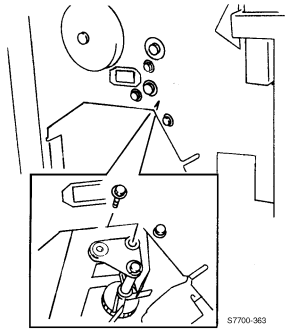


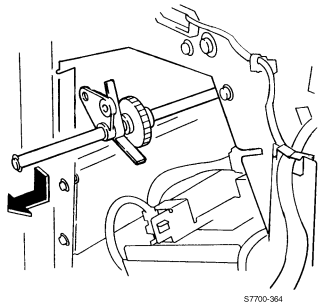


**Figure 11-21 Paddle Shaft**

## Removal

1. Remove the Rear, Left and Right Covers (RRP 72, on page 11-330).
2. Remove the Cam Bracket Assembly (RRP 81, on page 11-341).
3. Remove the Staple Unit (RRP 82, on page 11-342).
4. Remove the e-clips from both ends of the shaft.
5. Remove the gear and bushing from the front end of the shaft.
6. Remove the bushing from the front and slide out the shaft.
7. Remove the Bushings and KL-Clips from both ends.
8. Slide the shaft to the rear and slide out.

# RRP 80 Paper Transport Motor (Motor Assembly Main)

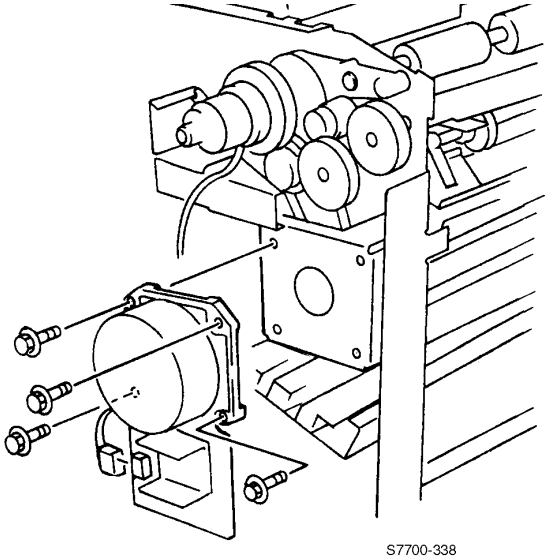


**Figure 11-22 Paper Transport Motor**

## Removal

1. Remove the Rear Cover (RRP 72, on page 11-330).
2. Remove four screws.
3. Undo the connector and lift the motor up and then out to free the belt.

# RRP 81 Cam Bracket Assembly

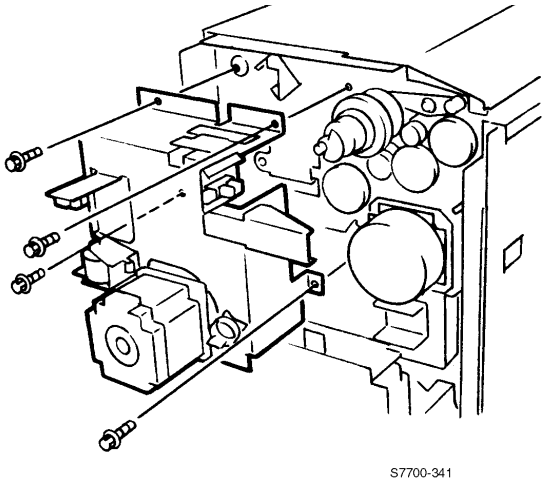


**Figure 11-23 Cam Bracket Assembly**

## Removal

1. Remove the Rear and Top Covers (RRP 72, on page 11-330).
2. Remove one screw securing the Decurler Cam Sensor.
3. Remove one screw from the Eject Clamp Home Sensor.
4. Disconnect the wiring harness from the Set Clamp Home Sensor.
5. Remove the wiring harness from the bracket.
6. Disconnect the wiring harness from the Eject Motor.
7. Remove four screws from the bracket and remove the Cam Bracket Assembly.

**Note** When reinstalling the Cam Bracket Assembly the manipulate the Eject Assembly to ensure the gears follow one another from the back of the Cam Bracket Assembly. Manually push the set clamps to engage the gears.

# RRP 82 Staple Unit Assembly and Motor

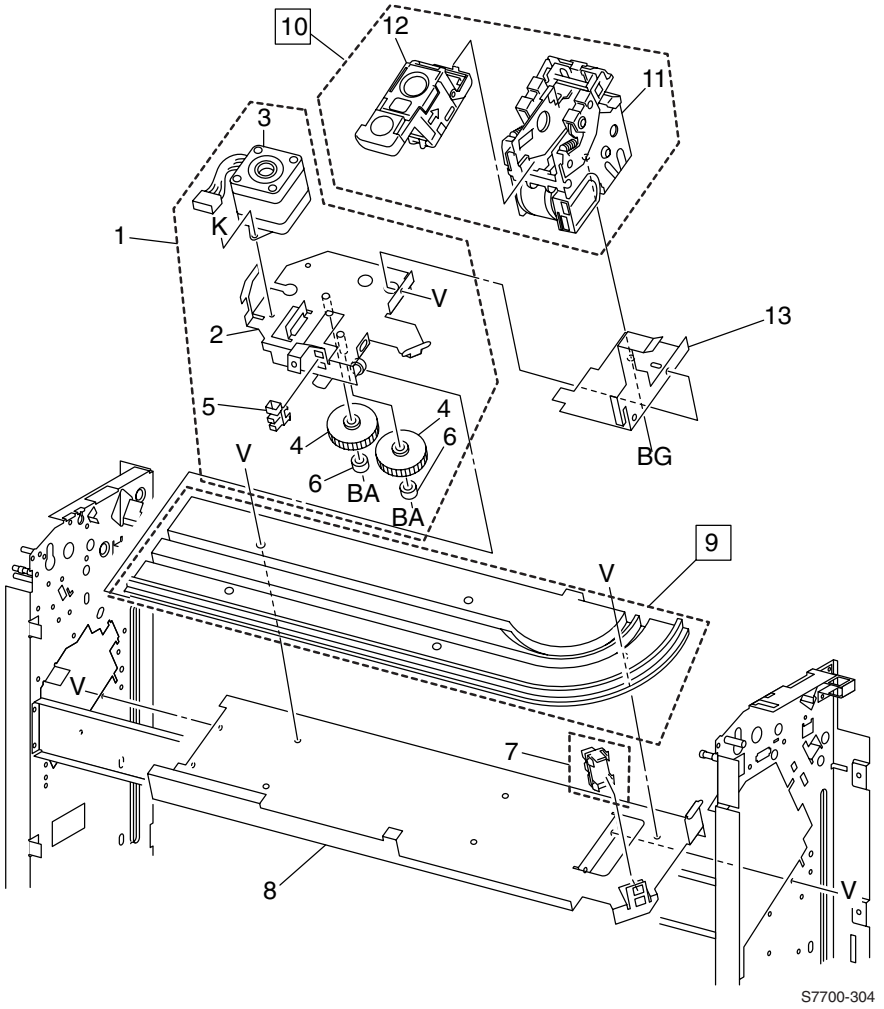


**Figure 11-24 Staple Unit Assembly**

## Removal

### Staple Unit Assembly

1. Remove the Front Cover (RRP 72, on page 11-330).
2. Remove the two connectors to the Staple Unit.
3. Remove two screws, note: one screw has a ground wire.
4. Pull the Staple Unit Assembly down, tilt up and pull out towards the front.

### Staple Motor

1. Remove the staple unit assembly.
2. Remove the right cover.
3. Disconnect the wiring harness.
4. Remove two screws and remove the motor.

# RRP 83 Compiler Tray

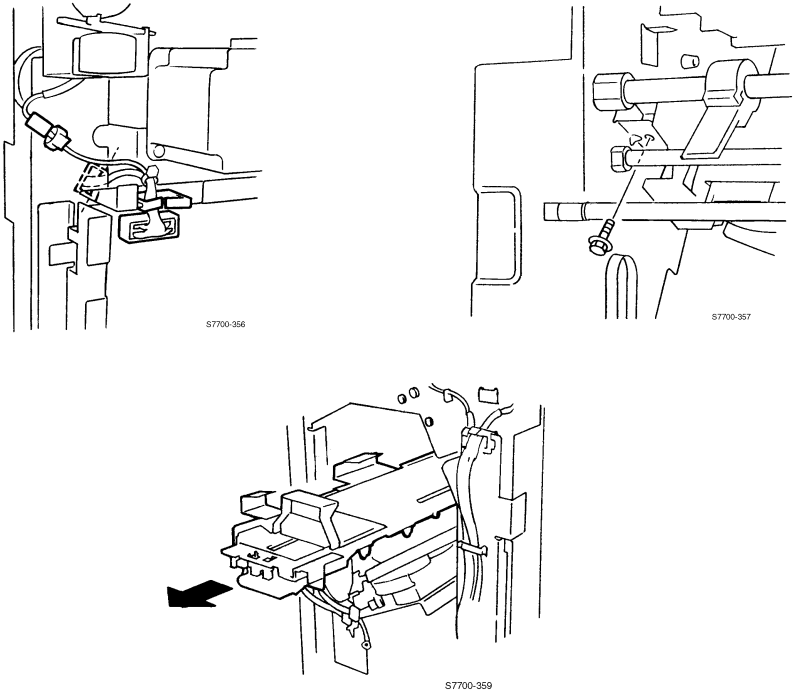


**Figure 11-25 Compiler Tray**

## Removal

1. Remove all covers (RRP 72, on page 11-330).
2. Remove the Finisher Control Board Shield (RRP 77, on page 11-336).
3. Disconnect P848 connector.
4. Remove Set clamp solenoid connector.
5. Remove the Staple Unit (RRP 82, on page 11-342).
6. Remove two screws from the bottom of the tamper assembly, front and rear.
7. Push the wiring harness into the printer frame.
8. Tilt the carriage up and slide straight back letting the carriage drop down in the frame, then slide straight out the stapler cavity.

# Finisher FRU Parts List

## Finisher Unit Main Assemblies FRUs

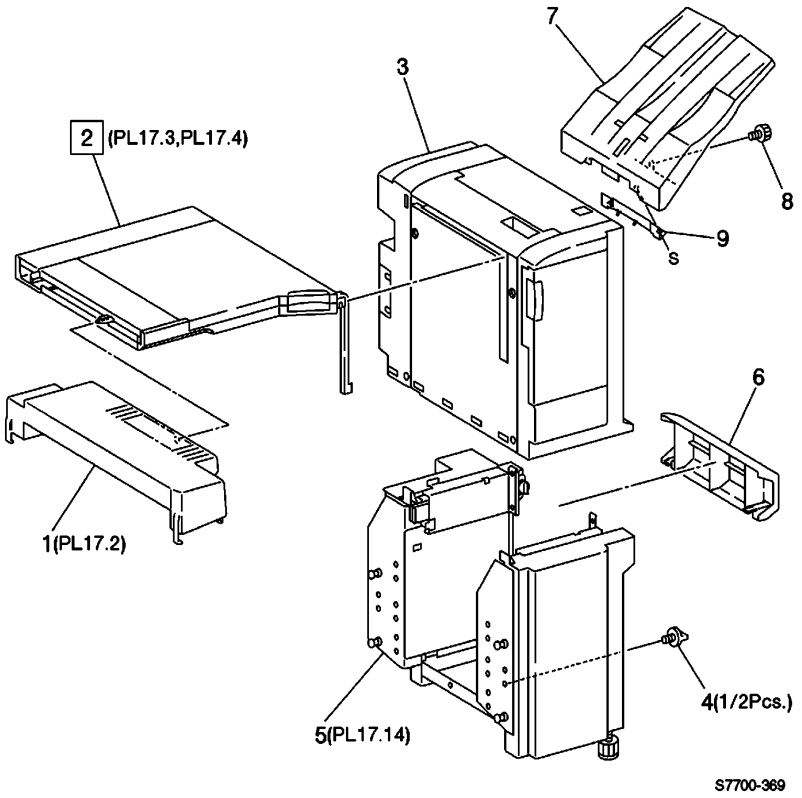


**Figure 11-26 Finisher Unit Main Assemblies FRUs**

**Table 11-2 Finisher Unit Main Assemblies FRUs List**

| No. | Part Number | Qty | Description |
|---|---|---|---|
| 1 | 116-1292-00 | 1 | Gate Unit |
| 2 | 116-1280-01 | 1 | H-Transport Assembly |
| 3 | | | Staple Finisher |
| 4 | | | Screw |
| 5 | | | Rack Assembly |
| 6 | 116-1244-00 | 1 | Right Cover |
| 7 | 116-1278-00 | 1 | Stacker Tray |
| 8 | 116-1279-00 | 1 | Thumb Screw |
| 9 | | | Bracket |

# Finisher Covers FRUs

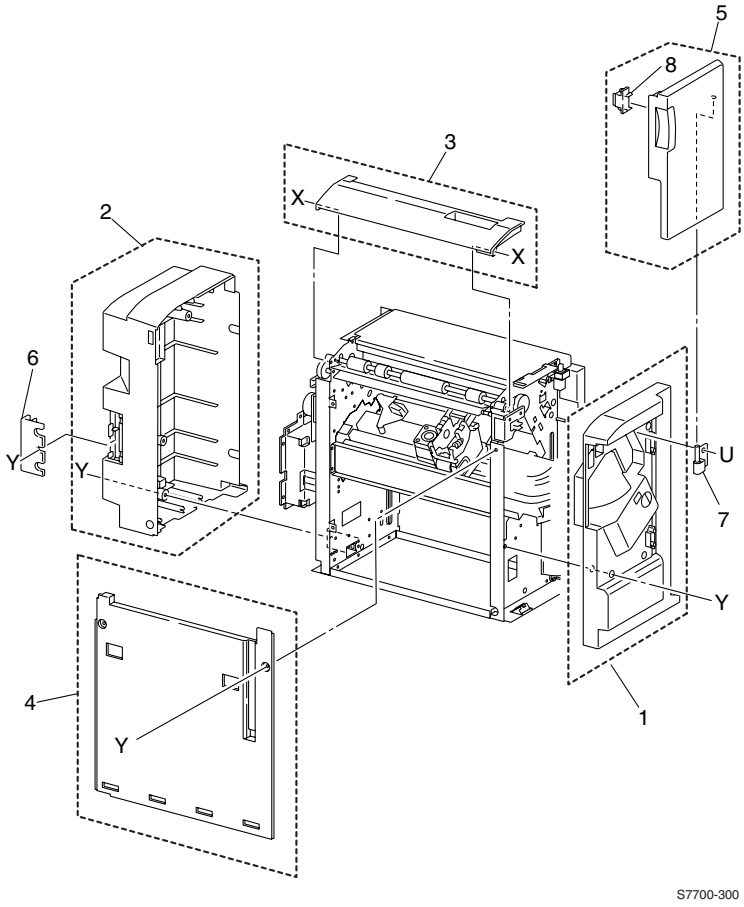


**Figure 11-27 Finisher Covers FRUs**

**Table 11-3 Finisher Covers FRUs List**

| No. | Part Number | Qty | Description |
|---|---|---|---|
| 1 | 116-1238-00 | 1 | Front Cover |
| 2 | 116-1239-00 | 1 | Rear Cover |
| 3 | 116-1236-00 | 1 | Top Cover |
| 4 | 116-1237-00 | 1 | Left Cover |
| 5 | 116-1245-00 | 1 | Front Door |
| 6 | | | Left Panel |
| 7 | | | Hinge |
| 8 | | | Magnet |

# Finisher Stand FRUs

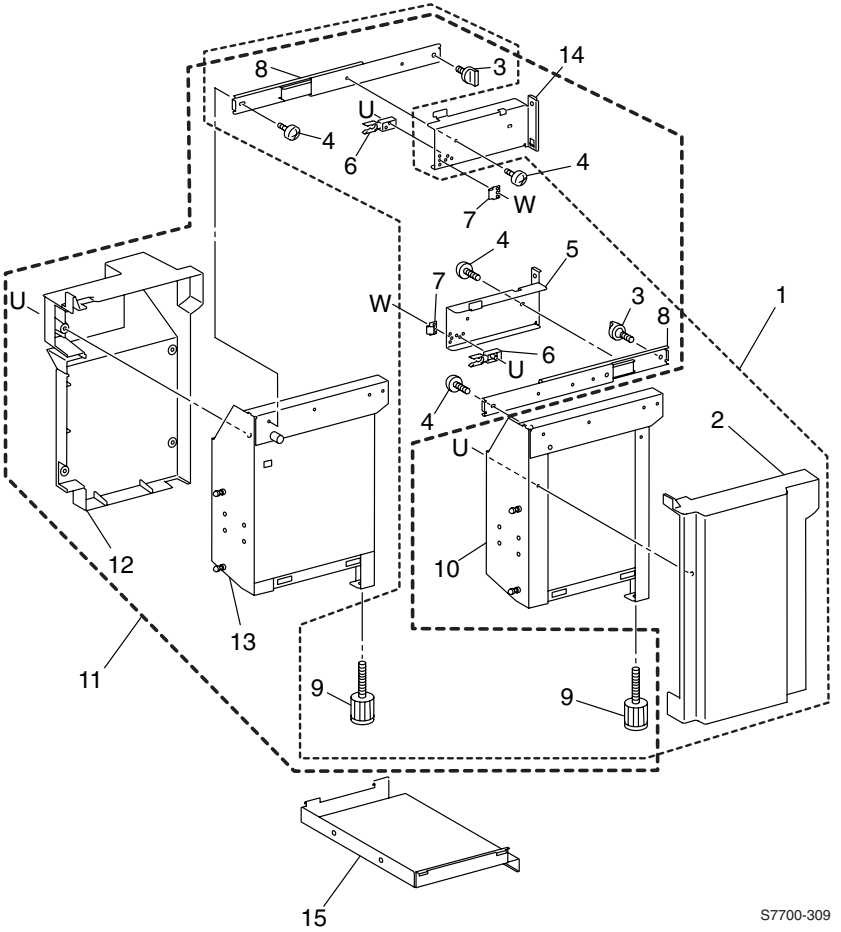


**Figure 11-28 Finisher Stand FRUs**

**Table 11-4 Finisher Stand FRUs List**

| No. | Part Number | Qty | Description |
|---|---|---|---|
| 1 | 116-1315-00 | 1 | Front Rack Assembly (Item 2-10) |
| 2 | | | Front Cover |
| 3 | | | Knob Screw |
| 4 | | | Screw |
| 5 | | | Bracket |
| 6 | | | Stopper |
| 7 | | | Plate Spring |
| 8 | | | Rail |
| 9 | | | Foot |
| 10 | | | Front Rack |
| 11 | 116-1316-00 | 1 | Rear Rack Assembly (Item 3-9, 12-14) |
| 12 | | | Rear Cover |
| 13 | | | Rack Cover |
| 14 | | | Bracket |
| 15 | | | Bottom Plate |

# Gate Unit FRUs

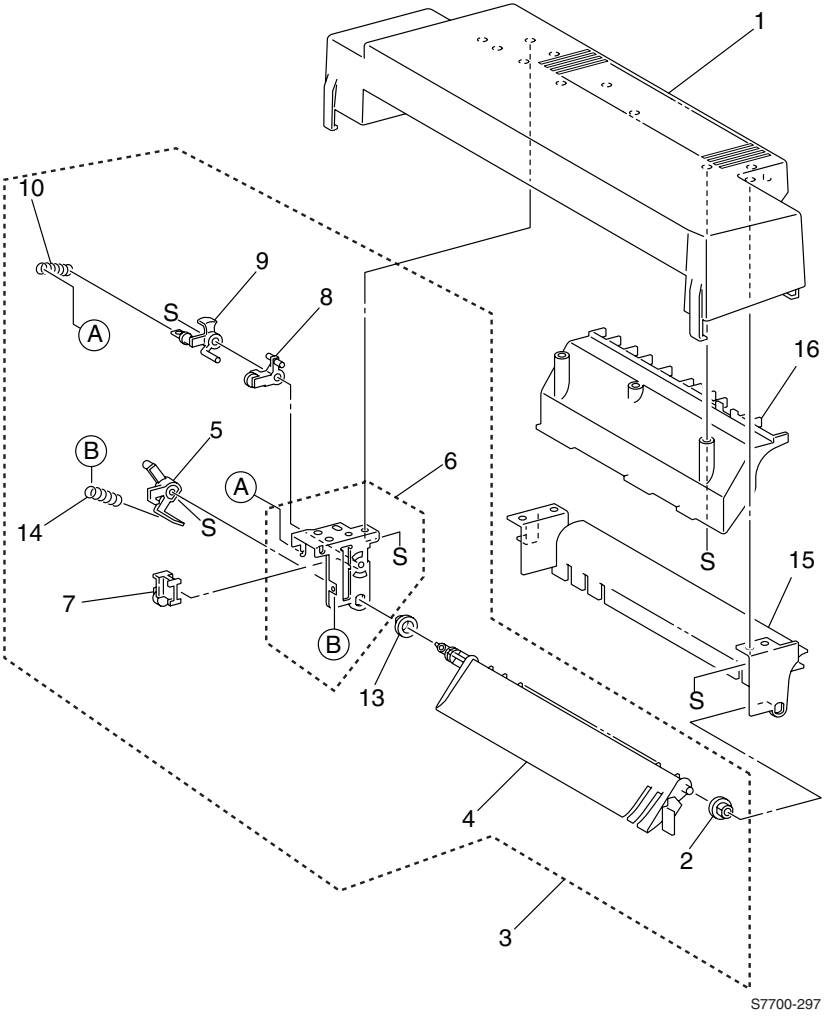


**Figure 11-29 Gate Unit FRUs**

**Table 11-5 Gate Unit FRUs List**

| No. | Part Number | Qty | Description |
|---|---|---|---|
| 1. | 116-1292-00 | | No Gate Cover |
| 2. | | | Bearing |
| 3 | 116-1293-00 | 1 | Gate Assembly (Item 4-14) |
| 4 | | | In-Gate |
| 5 | | | In-Gate Lever |
| 6 | 116-1294-00 | 1 | Gate Bracket |
| 7 | | | Link Assembly |
| 8 | | | Lever Assembly |
| 9 | | | Lever |
| 10 | | | Spring |
| 11 | | | Gate Link |
| 12 | | | |
| 13 | | | Bearing |
| 14 | | | Spring |
| 15 | | | Exit Chute |
| 16 | | | Chute |

# Horizontal Transport Assembly FRUs

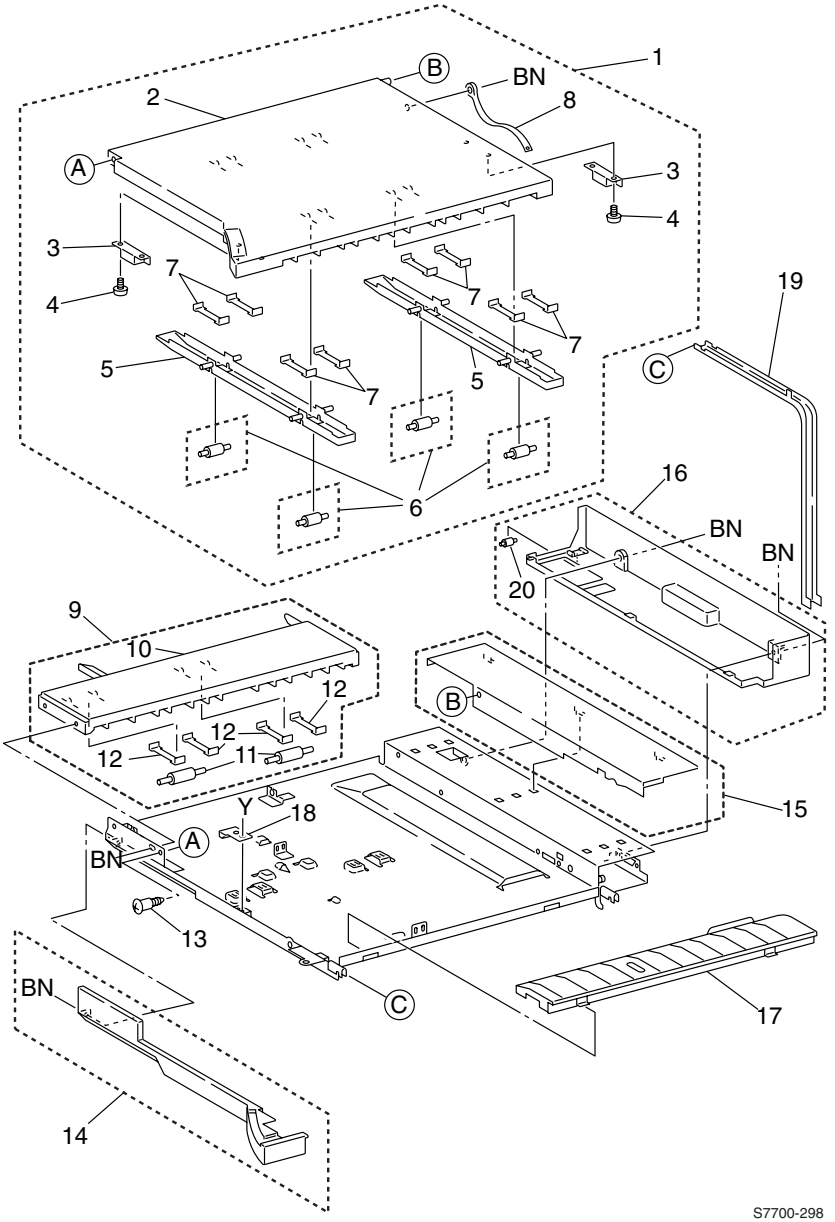


**Figure 11-30 Horizontal Transport Assembly FRUs**

**Table 11-6 Horizontal Transport Assembly FRUs List**

| No. | Part Number | Qty | Description |
|---|---|---|---|
| 1 | 116-1290-00 | 1 | H-Transport Open Cover Assembly (Item 2-7) |
| 2 | | | H-Transport Open Cover |
| 3 | 116-1291-00 | | Magnetic Catch |
| 4 | | | Screw |
| 5 | | | Guide |
| 6 | 116-1246-00 | 1 | Roll |
| 7 | | | Plate Spring |
| 8 | | | Stopper |
| 9 | 116-1289-00 | | Entrance Upper Cover Assembly (Item 10-12) |
| 10 | | | Entrance Upper Cover |
| 11 | | | Roll |
| 12 | | | Plate Spring |
| 13 | | | Screw |
| 14 | 116-1259-00 | 1 | H-Transport Front Cover |
| 15 | 116-1261-00 | 1 | H-Transport Upper Rear Cover |
| 16 | 116-1263-00 | 1 | H-Transport Rear Cover |
| 17 | | | H-Transport Exit Guide |
| 18 | | | Stopper |
| 19 | | | Support |

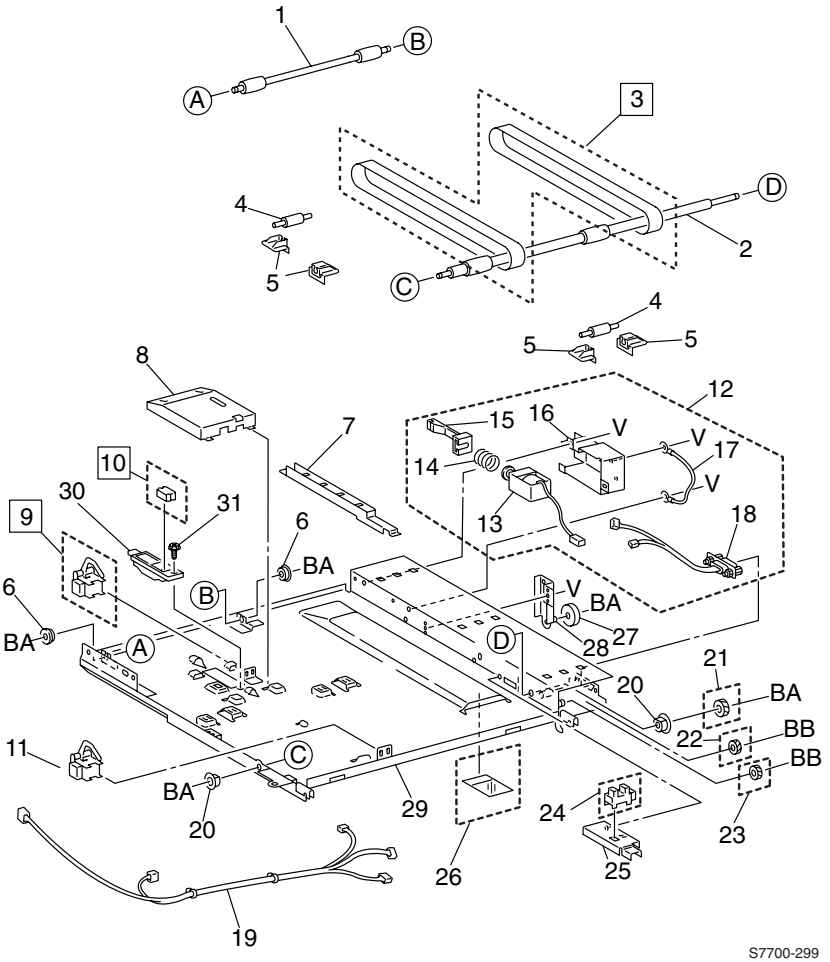


**Figure 11-31 Horizontal Transport Assembly FRUs (cont'd.)**

**Table 11-7 Horizontal Transport Assembly FRUs List (cont'd.)**

| No. | Part Number | Qty | Description |
|---|---|---|---|
| 1 | | | H-Transport Roll (IN) |
| 2 | | | H-Transport Roll (OUT) |
| 3 | 116-1284-00 | 1 | H-Transport Belt (REP 17.4.1) |
| 4 | | | Roll |
| 5 | | | Support |
| 6 | | | Bearing (Ball) |
| 7 | | | Harness Guide |
| 8 | | | Cover |
| 9 | 116-1644-00 | 1 | H-Transport Entrance Sensor (REP 17.4.2) |
| 10 | 116-1285-00 | 1 | Top Tray Full Sensor (REP 17.4.2) |
| 11 | 116-1247-01 | 1 | H-Transport Exit Sensor |
| 12 | 116-1286-00 | 1 | Gate In Solenoid Assembly (Item 13-18) |
| 13 | | | Gate In Solenoid |
| 14 | | | Spring |
| 15 | | | Link |
| 16 | | | Cover |
| 17 | | | Bracket |
| 18 | | | Earth Wire |
| 19 | | | Wire Harness |
| 20 | | | Bearing |
| 21 | 116-1281-00 | 1 | Gear (37T) |
| 22 | 116-1282-00 | 1 | Gear (30T) |
| 23 | 116-1283-00 | | Gear (26T) |
| 24 | 116-1234-00 | 11 | H-Transport Interlock Sensor |
| 25 | | | Bracket |
| 26 | 116-1267-00 | 1 | Paper Guide |
| 27 | | | Roll |
| 28 | | | Bracket |
| 29 | | | H-Transport Frame |

# Top Cover and Eject Roll FRUs

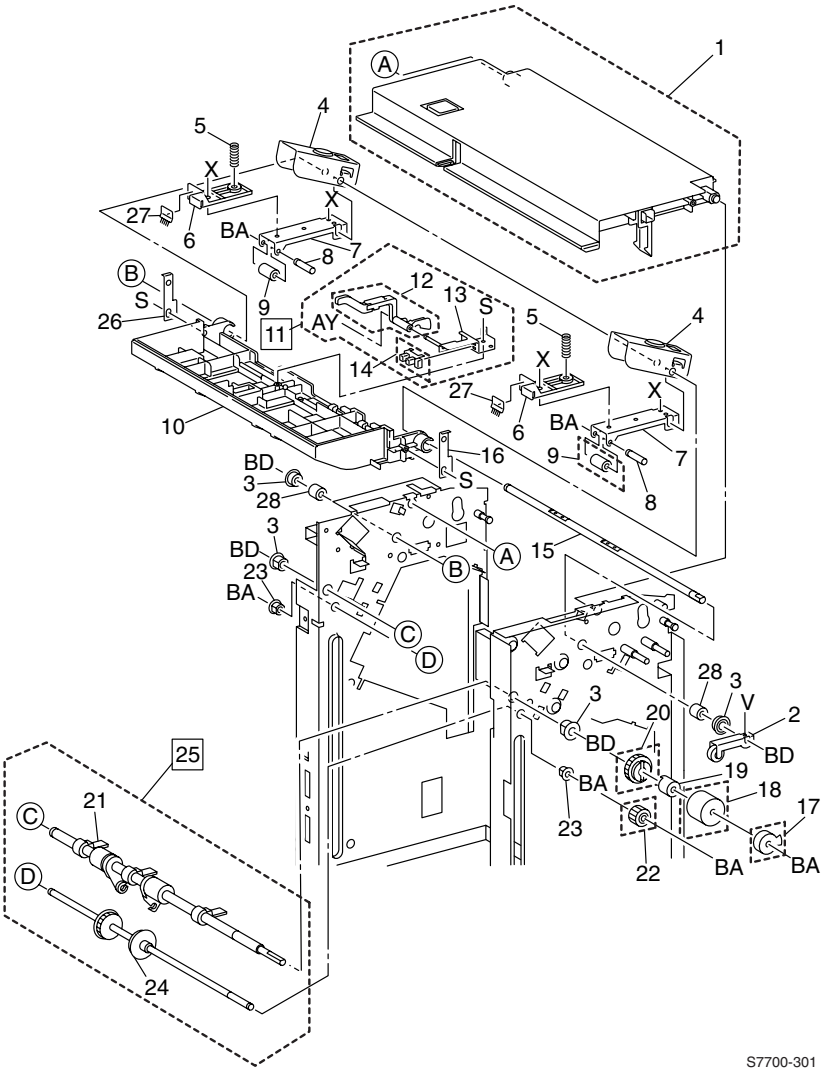


**Figure 11-32 Top Cover and Eject Roll FRUs**

**Table 11-8 Top Cover and Eject Roll FRUs List**

| No. | Part Number | Qty | Description |
|---|---|---|---|
| 1 | 116-1262-00 | 1 | Top Open Cover Assembly |
| 2 | | | Arm Assembly |
| 3 | | | Bearing |
| 4 | | | Bracket |
| 5 | | | Spring |
| 6 | | | Support |
| 7 | | | Bracket |
| 8 | | | Shaft |
| 9 | 116-1302-00 | 1 | Eject Pinch Roll |
| 10 | | 1 | Eject Chute |
| 11 | 116-1272-00 | 1 | Stack Height Sensor Assembly (Item 12-14) |
| 12 | | 1 | Actuator |
| 13 | | | Bracket |
| 14 | 116-1253-00 | 1 | Stack Height Sensor |
| 15 | | | Shaft, Set Clamp |
| 16 | | | Link |
| 17 | 116-1264-00 | 1 | Actuator |
| 18 | | | Collar |
| 19 | 116-1258-00 | 1 | Clutch |
| 20 | 116-1303-00 | 1 | Gear (28Z) |
| 21 | | | Eject Roll |
| 22 | 116-1301-00 | 1 | Gear (20Z) |
| 23 | | | Bearing |
| 24 | | | Eject Shaft |
| 25 | 116-1302-00 | 1 | Eject Roll Assembly (Item 21.24) (REP 17.6.2) |
| 26 | | | Link |
| 27 | | | Eliminator |

# Paper Transport Assembly FRUs

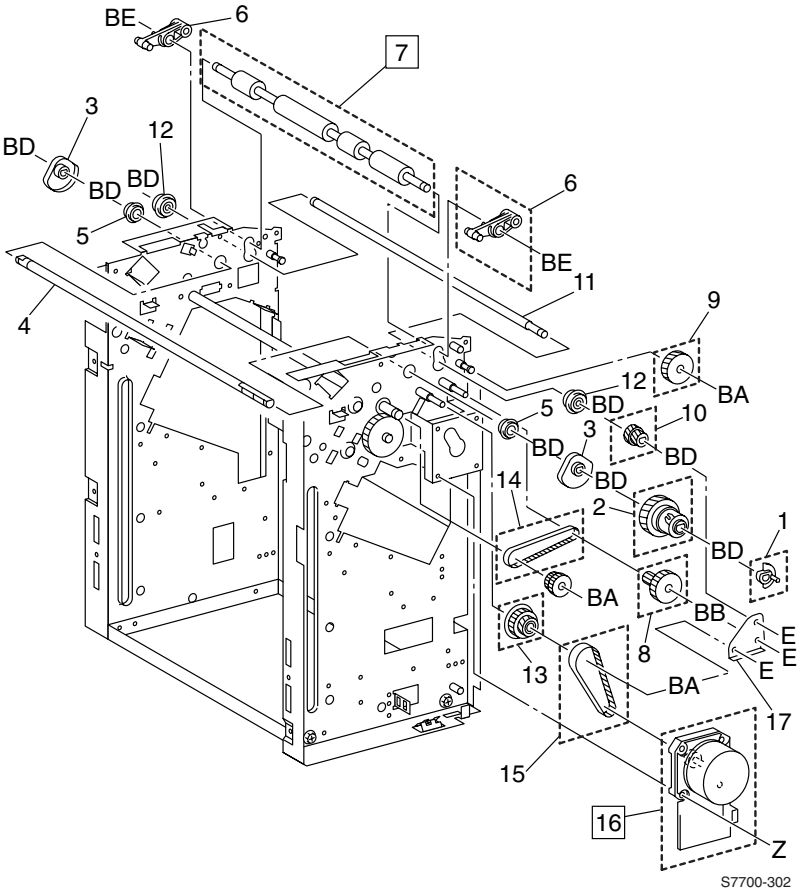


**Figure 11-33 Paper Transport Assembly FRUs**

**Table 11-9 Paper Transport Assembly FRUs List**

| No. | Part Number | Qty | Description |
|---|---|---|---|
| 1 | 116-1248-00 | 1 | Actuator |
| 2 | 116-1249-00 | 1 | Clutch Assembly, Decurler Cam |
| 3 | | | Cam |
| 4 | | | Shaft |
| 5 | | | Bearing |
| 6 | 116-1250-00 | 1 | Arm |
| 7 | 116-1302-00 | 1 | Decurler Roll Assembly (REP 17.7.1) |
| 8 | 116-1301-00 | 1 | Gear (40Z / 20T) |
| 9 | 116-1301-00 | 1 | Gear (40Z) |
| 10 | 116-1301-00 | 1 | Gear (18Z / 21T) |
| 11 | | | Shaft |
| 12 | | | Bearing |
| 13 | 116-1301-00 | 1 | Gear (23Z / 52Z) |
| 14 | 116-1265-00 | 1 | Belt |
| 15 | 116-1242-00 | 1 | Belt |
| 16 | 116-1241-00 | 1 | Motor Assembly Main |

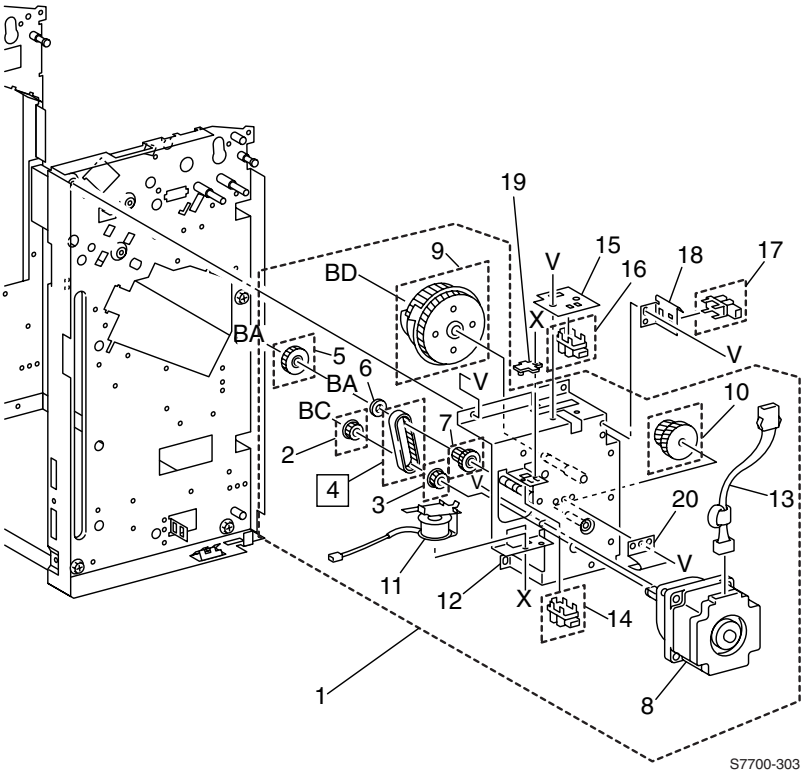


**Figure 11-34 Paper Transport Assembly FRUs (cont'd.)**

**Table 11-10 Paper Transport Assembly FRUs List (cont'd.)**

| No. | Part Number | Qty | Description |
|---|---|---|---|
| 1 | 116-1266-00 | 1 | Cam Bracket Assembly (Item 2-12, 14, 19) |
| 2 | 116-1303-00 | 1 | Pully |
| 3 | 116-1303-00 | 1 | Gear (15Z) |
| 4 | 116-1271-00 | 1 | Belt (REP 17.8.1) |
| 5 | 116-1303-00 | 1 | Gear (30Z) |
| 6 | | | Collar |
| 7 | 116-1303-00 | 1 | Gear Pully |
| 8 | | | Eject Motor |
| 9 | 116-1303-00 | 1 | Cam Gear |
| 10 | 116-1303-00 | 1 | Gear (42Z / 27Z) |
| 11 | | | Set Clamp Solenoid |
| 12 | | | Bracket |
| 13 | | | Wire Harness |
| 14 | 116-1234-00 | 1 | Set Clamp Home Sensor |
| 15 | | | Plate |
| 16 | 116-1234-00 | 1 | Eject Clamp Home Sensor |
| 17 | 116-1234-00 | 1 | Decurler Cam Home Sensor |
| 18 | | | Bracket |
| 19 | | | Stopper |

# Staple Unit Assembly FRUs

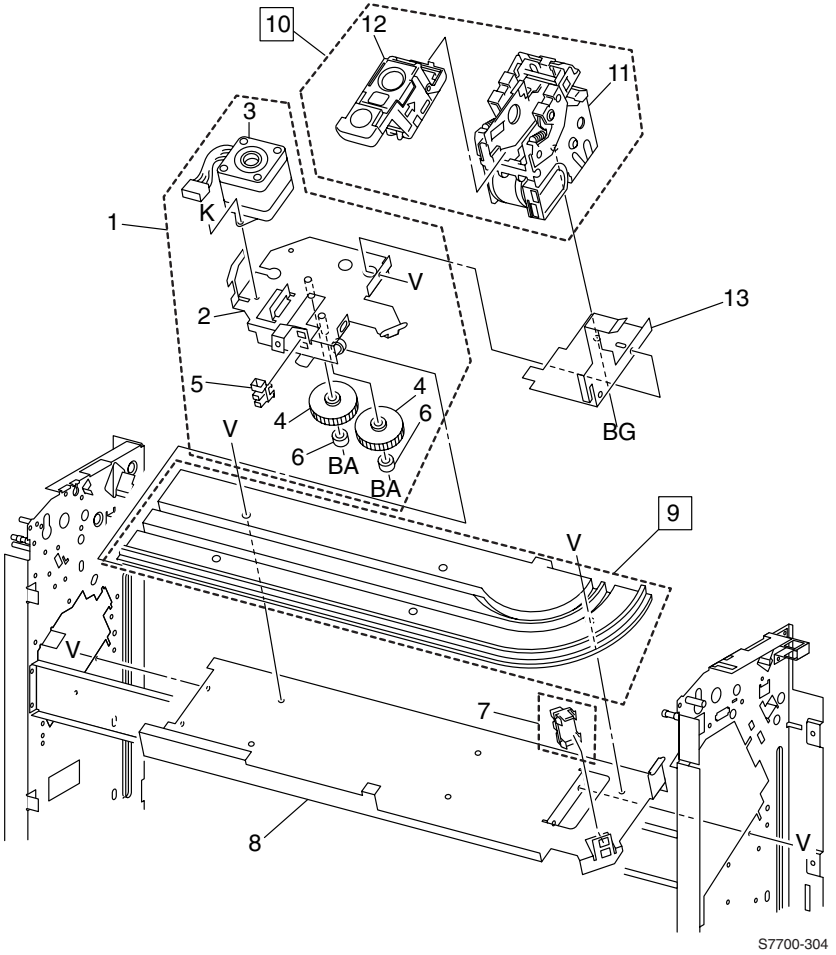


**Figure 11-35 Staple Unit Assembly FRUs**

**Table 11-11 Staple Unit Assembly FRUs List**

| No. | Part Number | Qty | Description |
|---|---|---|---|
| 1 | 116-1255-00 | 1 | Carriage Assembly (Item 2-6) |
| 2 | | | Bracket Assembly |
| 3 | 116-1256-00 | 1 | Motor Assembly Stepping |
| 4 | | | Gear |
| 5 | | | Staple Remover |
| 6 | | | Roll |
| 7 | 116-1259-00 | 1 | Staple Front Corner Sensor |
| 8 | | | Plate |
| 9 | 116-1254-00 | 1 | Rail (REP 17.9.1) |
| 10 | 116-1257-00 | 1 | Staple Assembly (Item 11.12) (REP 17.9.2) |
| 11 | | | Staple |
| 12 | | | Cartridge |
| 13 | | | Bracket |

# Compiler Tray Assembly FRUs

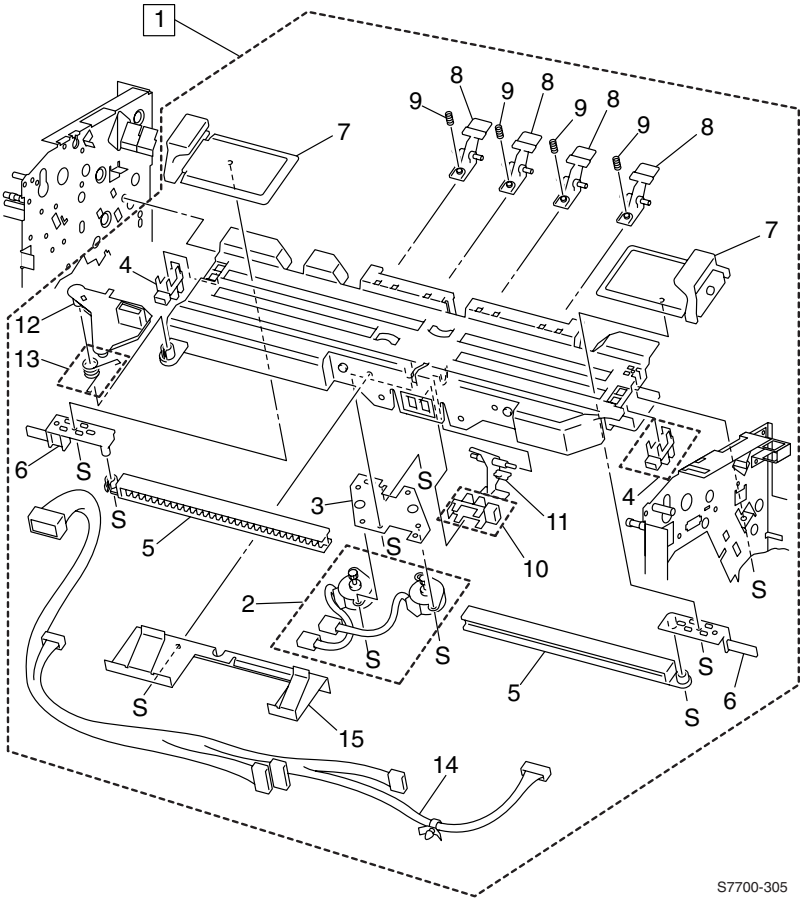


**Figure 11-36 Compiler Tray Assembly FRUs**

**Table 11-12 Compiler Tray Assembly FRUs List**

| No. | Part Number | Qty | Description |
|---|---|---|---|
| 1 | 116-1251-00 | 1 | Compiler Tray Assembly (Item 2-15) |
| 2 | 116-1252-00 | 1 | Motor Assembly Tamper |
| 3 | | | Plate |
| 4 | 116-1253-00 | 1 | Front /Rear Tamper Home Sensor |
| 5 | | | Rack |
| 6 | | | Actuator |
| 7 | | | Tamper Assembly |
| 8 | | | Finger |
| 9 | | | Spring |
| 10 | 116-1234-00 | 1 | Compiler Paper Sensor |
| 11 | | | Actuator |
| 12 | | | Paper Guide |
| 13 | 116-1269-00 | 1 | Spring |
| 14 | | | Wire Harness |
| 15 | | | End Guide |

# Stacker Elevator Assembly FRUs

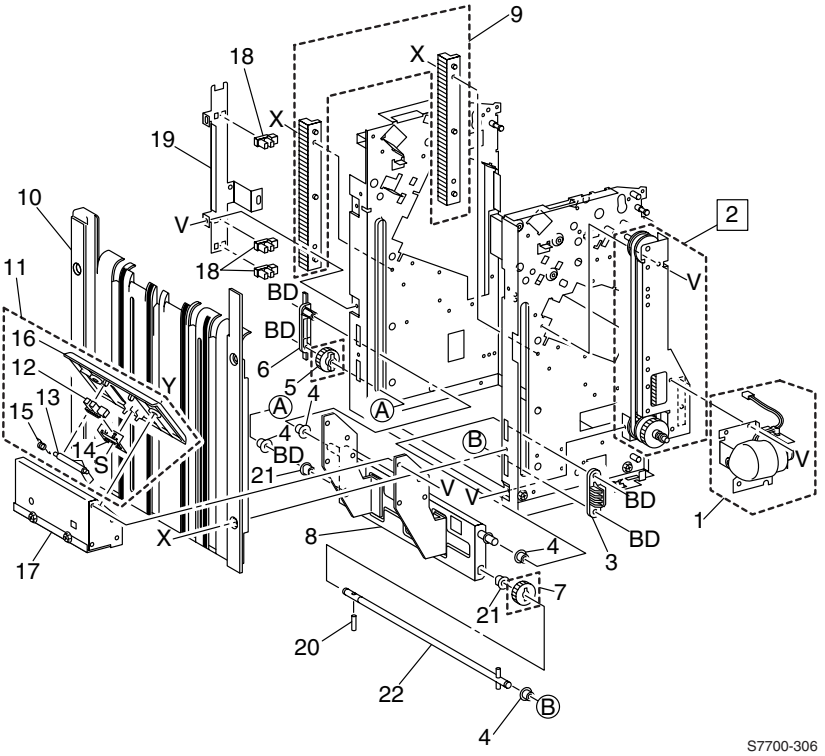


**Figure 11-37 Stacker Elevator Assembly FRUs**

**Table 11-13 Stacker Elevator Assembly FRUs List**

| No. | Part Number | Qty | Description |
|---|---|---|---|
| 1 | 116-1287-00 | 1 | Stacker Motor Assembly |
| 2 | 116-1276-00 | 1 | Bracket Assembly Belt |
| 3 | | | Clamp |
| 4 | | | Bearing |
| 5 | 116-1274-00 | 1 | Gear (Rear) |
| 6 | | | Actuator |
| 7 | 116-1275-00 | 1 | Gear (Front) |
| 8 | | | Stacker Tray Bracket Assembly |
| 9 | 116-1273-00 | 1 | Rack |
| 10 | | | Tray Guide |
| 11 | 116-1270-00 | 1 | Stack Paper Assembly (Item 12-16) |
| 12 | 116-1253-00 | 1 | Stack Paper Sensor |
| 13 | | | Actuator |
| 14 | | | Bracket |
| 15 | | | Spring |
| 16 | | | Cover |
| 17 | | | Bracket |
| 18 | 116-1253-00 | | Upper Limit /Stack A /Stack B Sensor |
| 19 | | | Bracket |
| 20 | | | Pin |
| 21 | | | Bearing |
| 22 | | | Shaft |

# Exit Assembly FRUs

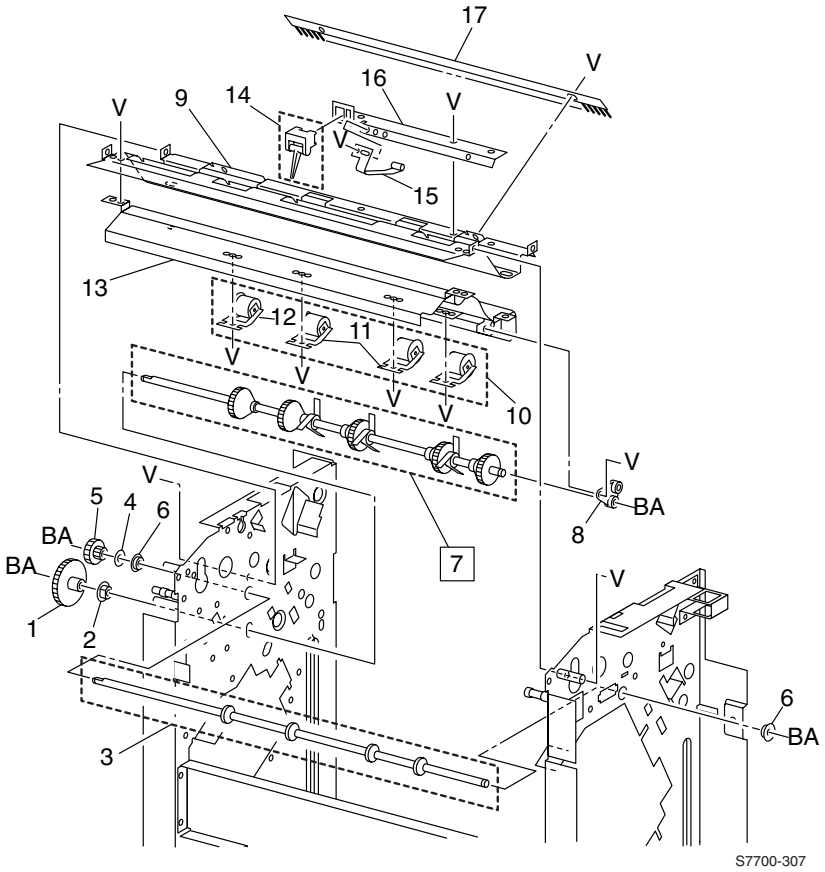


**Figure 11-38 Exit Assembly FRUs**

**Table 11-14 Exit Assembly FRUs List**

| No. | Part Number | Qty | Description |
|---|---|---|---|
| 1 | | | Gear (48Z) |
| 2 | | | Bearing |
| 3 | 116-1243-00 | 1 | Exit Shaft |
| 4 | | | Collar |
| 5 | | | Gear (32Z / 18T) |
| 6 | | | Bearing |
| 7 | 116-1304-00 | 1 | Paddle Gear Shaft (REP 17.12.1) |
| 8 | | | Paddle Bearing |
| 9 | | | Lower Exit Chute |
| 10 | 116-1302-00 | 1 | Pinch Roll (Exit 1) |
| 11 | | | Pinch Roll (Exit 2) |
| 12 | | | Pinch Roll (Exit 3) |
| 13 | | | Upper Exit Chute |
| 14 | 116-1313-00 | 1 | Compiler Entrance Sensor |
| 15 | | | Plate Spring |
| 16 | | | Bracket |
| 17 | | | Eliminator |

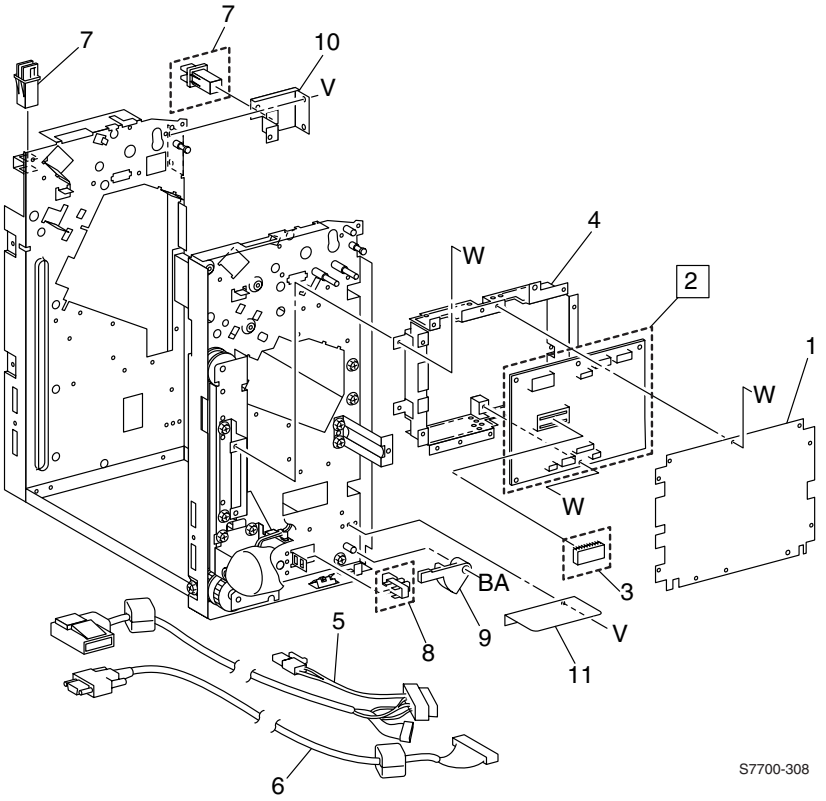


**Figure 11-39 Electrical FRUs**

**Table 11-15 Electrical FRUs List**

| No. | Part Number | Qty | Description |
|---|---|---|---|
| 1 | | | Board Cover |
| 2 | 116-1235-00 | 1 | Finisher Board |
| 3 | 116-1314-00 | 1 | ROM |
| 4 | | | PWB Bracket |
| 5 | | | DC Harness |
| 6 | | | Cable |
| 7 | 116-1233-00 | 1 | Switch |
| 8 | 116-1253-00 | 1 | Docking Interlock Switch |
| 9 | | | Plate Spring |
| 10 | | | Bracket |

# Finisher Wiring Diagrams

This section is comprised of two diagrams: 1) The Finisher Block Diagram and 2) The Finisher Wiring Diagram. Both appear beginning on the next page and face each other for ease of reference.

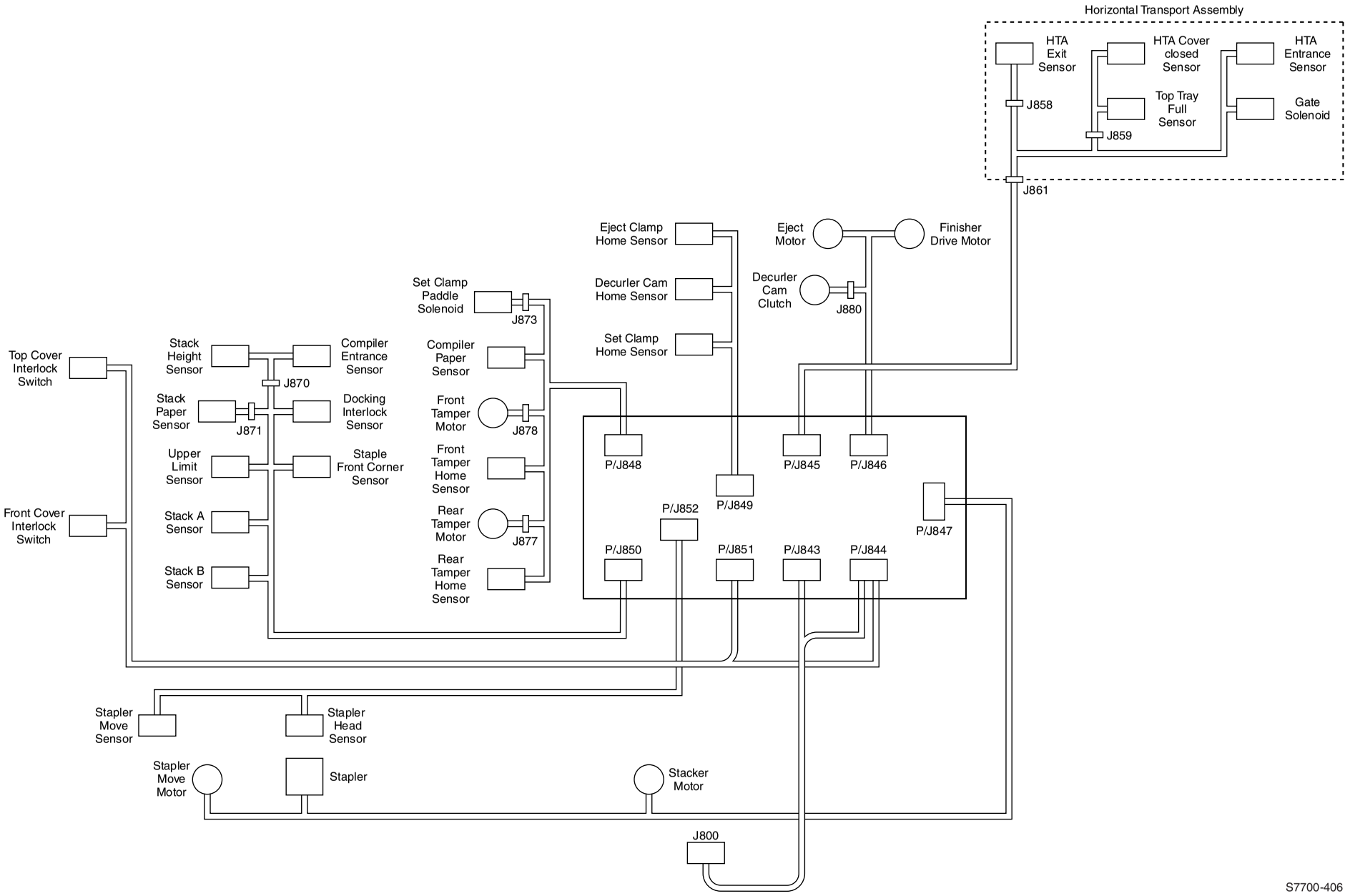


**Figure 12-1 Block diagram of the Finisher**

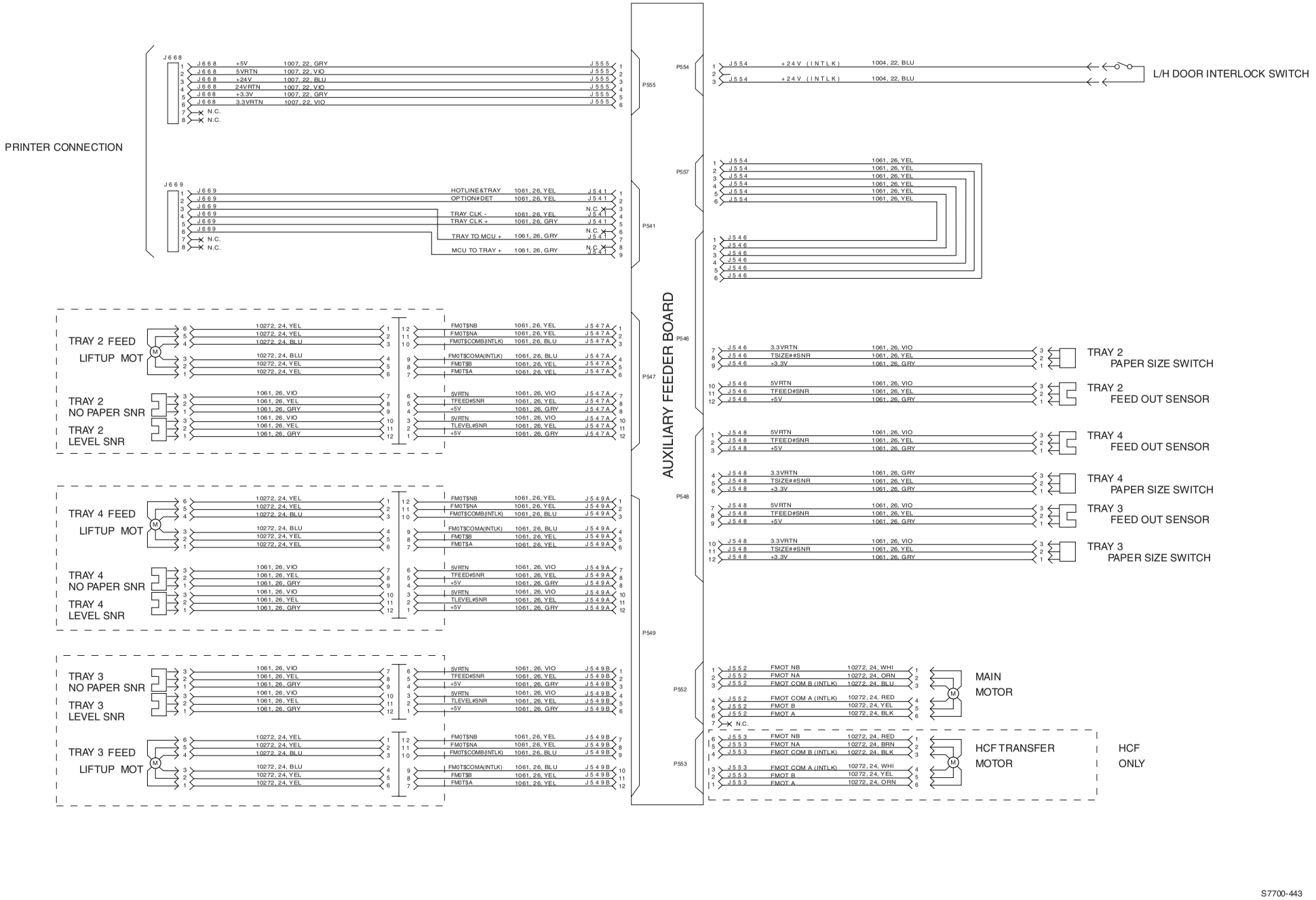


**Figure 12-2 Wiring diagram of the Finisher**